D50IR Manual 18-Mar-2010

MOULTRIE

DIGITAL GAME CAMERA
USER MANUAL

Please take a few minutes to read and understand these instructions before using.

QUICK START INSTRUCTIONS

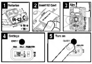

IMPORTANT NOTICE: If you have a problem, call us for help.
DO NOT RETURN THIS UNIT TO THE RETAILER. (800) 653-3334
Manual covers the following units:
MFH-DGS-D50IR

9 CAMERA • DESCRIPTION

D50IR MODEL CAMERA

8. POWER ON/OFF BUTTON
9. FUNCTION SWITCHES
   - MODE (IR AIM, SETUP, AUTO)
   - DELAY (1, 5, 10, 30 MINS)
   - RESOLUTION (VID, HI, LO)
10. STATUS INDICATOR
11. BATTERY INDICATOR
12. SELECT BUTTON
13. CHANGE BUTTONS (UP ▲ /DOWN ▼)
14. ENTER BUTTON
15. SD MEMORY CARD SLOT
16. BATTERY COMPARTMENT
17. 12-VOLT EXTERNAL POWER PORT (This camera is compatible with the Moultrie Powerpanel accessory to extend your battery life. Please visit our website at www.moultriefeeders.com for more information

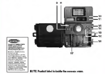

NOTE: Product label is inside the camera cover.

2 SETUP • PROGRAMMING

SET DATE AND TIME

In SETUP mode, the LCD will show the time. Press ENTER and the hour will flash. Press Up(▲) or Down(▼) to select the proper hour, then press ENTER again and the minute will flash. Press Up(▲) or Down(▼) to select the proper minute. Press ENTER again, AM or PM will flash. Press Up(▲) or Down(▼) to select the Day and Night accordingly. Press ENTER to confirm the selections.

After setting up the time, press SELECT and the LCD will show the year. Press ENTER and the year will flash. Press Up(▲) or Down (▼) to select the proper year and press ENTER again to confirm.

After setting up the year, press SELECT and the LCD will show the date. Press ENTER and the month will flash. Press Up(▲) or Down (▼) to select the proper month, then press ENTER again and the day will flash. Press Up(▲) or Down(▼) to select the proper day, then press ENTER again to confirm.

Press "SELECT"

AM 10:30	→	2009	→	131
Time		Year		Month & Date

EVENT DELAY

There are 4 different delay settings: 1 MIN., 5 MIN, 10 MIN. or 30 MIN. Slide the DELAY SWITCH to the position of your selection. When the game camera is in AUTO mode, it will work according to your selected event delay.

IMAGE QUALITY AND VIDEO

There are 3 different capture settings: Video (VID), High (HI) and Low (Lo). Please refer to the section 7 MEMORY – STORAGE/CAPCITY for the description of each setting. Slide the RESOLUTION SWITCH to the position of your selection. When the game camera is in AUTO mode, it will work according to your selected capture setting.

7 MEMORY • STORAGE/CAPACITY

Your camera supports external SD memory card ONLY (NO internal memory available). The LCD shows "0000" if NO SD memory card is inserted in AUTO mode. The camera cannot capture without external memory.

Please inserts a SD memory card.

Image capacity is based on average use and will vary.

MEMORY CHARTS:

D50IR MODEL CAMERA

Resolutions		Picture count road with 2GB SD Card	
Low	640 x 480	Low	8706
High	2560 x 1920	High	1577
Video	AVI 640 x 480	Video	204

IMPORTANT: Always turn unit off when inserting or removing a memory card to avoid damage and ensure that the camera properly updates the memory information.

4 SETUP • DEFINITIONS

ON/OFF button
Turn the unit ON or OFF. To turn ON you must press and hold the ON/OFF button until the LCD display activates.

MODE SWITCH
Depending on the position of the switch, there are 3 possible functions: IR AIM, SETUP and AUTO.

EVENT DELAY SWITCH
Depending on the position of the switch, there are 4 event delay time can be set: 1 min, 5mins, 10mins and 30mins.

RESOLUTION SWITCH
Depending on the position of the switch, there is one video option: VID and two images resolution options: HI and LO

UP(▲) OR DOWN (▼) BUTTON
Used to change the settings within the SETUP mode.

SELECT BUTTON
Make selections in SETUP mode.

ENTER BUTTON
Confirm the selection in SETUP mode.

SD MEMORY CARD PORT
Insert SD card for memory with the metal contact facing down. A SD card is required in order for the camera to capture images/videos.

STATUS INDICATOR
To indicate a motion is detected in IR AIM mode.

BATTERY INDICATOR
-To indicate the batteries are low, please replace batteries with fresh batteries.

1 SETUP • LOAD BATTERY

Unlock the two latches to open the camera cover.
Insert 4 fresh C Cell alkaline batteries into the battery compartment.
Place the batteries so the positive (+) and negative (-) polarities are lined up correctly as indicated in the battery compartment.
Close the camera cover. When the battery indicator turns "Green", replace the batteries with fresh C cell alkaline batteries.

2 SETUP • PROGRAMMING

TURN POWER ON AND OFF

Open the camera cover. Slide the MODE switch to the SETUP position. Press and hold the ON/OFF button until the time appear on the LCD display. If you want to turn the unit off, simply press the ON/OFF button again. The LCD shows "OFF" and then goes off.
NOTE: If there is no activity for 2 minutes, the camera will automatically shut off to conserve battery life.

10 WARRANTY

This product has been thoroughly tested and inspected before shipment. It is guaranteed from defects in material and workmanship from the date of purchase for 1 year. Under this limited guarantee we agree to replace or repair free of charge any part or parts which have been found to be defective in original material or workmanship. Should you require in-warranty service, call our Customer Service Department. If your problem cannot be solved over the telephone, we may need you to send us your defective product plus proof of purchase.

IMPORTANT:
This equipment has been tested and found to comply with the limits for a Class B digital device, pursuant to part 15 of the FCC Rules. These limits are designed to provide reasonable protection against harmful interference in a residential installation. This equipment generates, uses and can radiate radio frequency energy and, if not installed and used in accordance with the instructions, may cause harmful interference to radio communications. However, there is no guarantee that interference will not occur in a particular installation. If this equipment does cause harmful interference to radio or television reception, which can be determined by turning the equipment off and on, the user is encouraged to try to correct the interference by one or more of the following measures:
- Reorient or relocate the receiving antenna.
- Increase the separation between the equipment and receiver.
- Connect the equipment into an outlet on a circuit different from that to which the receiver is connected.
- Consult the dealer or an experienced radio/TV technician for help.

Changes or modifications not expressly approved in this manual could void your authority to operate this equipment.

CAUTION: Use of controls or adjustments or performance of procedures other than those specified herein may result in hazardous radiation exposure.

IF YOU HAVE A PROBLEM CALL US,
DO NOT RETURN TO THE RETAILER.
Moultrie Customer Service
(205) 664-6700 or (800) 653-3334
www.moultriefeeders.com
Moultrie Feeders
150 Industrial Rd.
Alabaster, AL 35007
Printed in China
(0307)

This product is covered by one or more of the following US Patents: 6735387, 6768868, 6834162 and other pending patents.
Warning! This product contains lead, a chemical known to the state of California to cause cancer, birth defects and other reproductive harm.

4 SETUP • DEFINITIONS

SETUP MODE
To change digital camera settings, the MODE switch has to be in the SETUP position.

AUTO MODE
Turn the MODE switch to the AUTO position, press and hold the ON/OFF button to switch on the camera. In the AUTO mode, the LCD display shows the time(Fig1) and then counts down for 10 sec(Fig2). The LCD goes off and the camera is STANDBY for capturing.

If a motion is detected, the camera will wake up and show the time(Fig3). While a picture or video clip is capturing, the LCD shows "SNAP". After the capturing process is finished, it will show the number of pictures or video clips remain(Fig4). Then the camera will be in STANDBY mode again.

AM 10:30	10	Motion detected & Capture picture →	AM 10:30	0231
Fig1 Shows Time	Fig2 Count down 10 sec		Fig3 Shows Time	Fig4 NO. of Pictures remain

MEMORY FULL
In the AUTO mode, if the LCD shows "0000", it means that the memory is full. The camera will shut off automatically to save battery life. Please insert an empty SD memory card for memory space.

LOW BATTERY
If the BATTERY indicator turns green, it means that the battery is low. Please replace batteries with fresh batteries.

5 OPERATIONS • MOUNTING

MOUNTING CAMERA

Use the mounting strap included to mount the camera securely in the desired location.

6 OPERATIONS • AIMING

INFRARED (IR) AIM
The camera can be aimed using the infrared detection system. Slide the MODE switch to IR AIM position. Press and hold the ON/OFF button until "Ir" is displayed on the LCD panel. The IR aiming mode is now active. Wave your hand in front of the camera. The STATUS light will turn red every time motion is detected. Find your desired target.

Note: The camera will shut down automatically after 2 minutes to save battery life.

THINGS TO REMEMBER

1. This camera is activated by infrared sensors that detect game by sensing a moving heat source whose temperature is different than the ambient temperature. temperatures and type of movement will effect the sensitivity of your camera. To verify the sensitivity you must go to the IR AIM mode and walk across the field of view at various distances from the camera noting the status light activity.

2. To maximize battery life the camera "sleeps" when no activity occurs for 2 minutes. It takes a couple of seconds (Flash will be slightly longer) to "wake" the camera when activity occurs. ONLY AFTER THE CAMERA WAKES will game movement result in a picture.

3. Battery life is different for every user! It is determined by the quality of the battery, amount of charge, temperature, number and type of pictures taken. You should expect an average of 60 days run time in above freezing weather, taking an average amount of photos daily. However, if you take a large number of photos it will shorten your running time in the field. This camera will not operate consonantly in below freezing temperatures.

3 SETUP • MODE SELECTION

GENERAL OPERATION

1. Automatic AUTO mode records images/videos using Infrared detection. ALWAYS LEAVE THE MODE SWITCH IN THE AUTO MODE OR THE CAMERA WILL NOT OPERATE.

2. Setup SETUP mode for setting up Date and Time as described in previous section.

3. IR Aim IR AIM mode for helping you to aim the camera towards the object. Please consult the section 6. OPERTAION – AIMING for detail description.

NOTE: When left inactive for more than 2 minutes in SETUP and IR AIM mode, the camera will automatically shutdown. The camera will need to be restarted to resume operation in SETUP and IR AIM mode.

8 CAMERA – SPECIFICATIONS

Operational Modes:	Auto – Automatic operation Setup – Set Date and Time IR Aim – Infra Red Aiming object
Video:	10 seconds AVI clips
Picture Resolution (pixels):	LO/HI (See Section7, Memory • Storage / Capacity)
Format:	JPEG – still images and AVI – video clips
Max. External SD Memory:	UP to 16GB (optional)
Infrared Sensor:	Passive, activated when motion is real-time
Infrared Sensor Range:	30 ft. / 22° width
Flash:	IR LEDs
Flash Range:	5 ft. - 30 ft.
Image Output:	Record in SD card
Event Delay:	1 MIN., 5 MIN, 10 MIN. or 30 MIN.
LCD Display Panel:	Displays Date/Time Setup and Images/ Videos Count
Power Supply:	4 Alkaline C Cells batteries
Duty Cycle:	30 days average with 4-C Cell batteries
Adjustable mounting:	Mounting Strap

9 CAMERA • DESCRIPTION

D50IR MODEL CAMERA

1. IR LEDs
2. CAMERA LENS (COLOR SENSOR)
3. CAMERA LENS (BLACK & WHITE SENSOR)
4. PIR SENSOR
5. LCD STATUS DISPLAY
6. LOCKABLE LATCHES
7. WEATHER-RESISTANT CASE

Downloaded from www.Manualslib.com manuals search engine

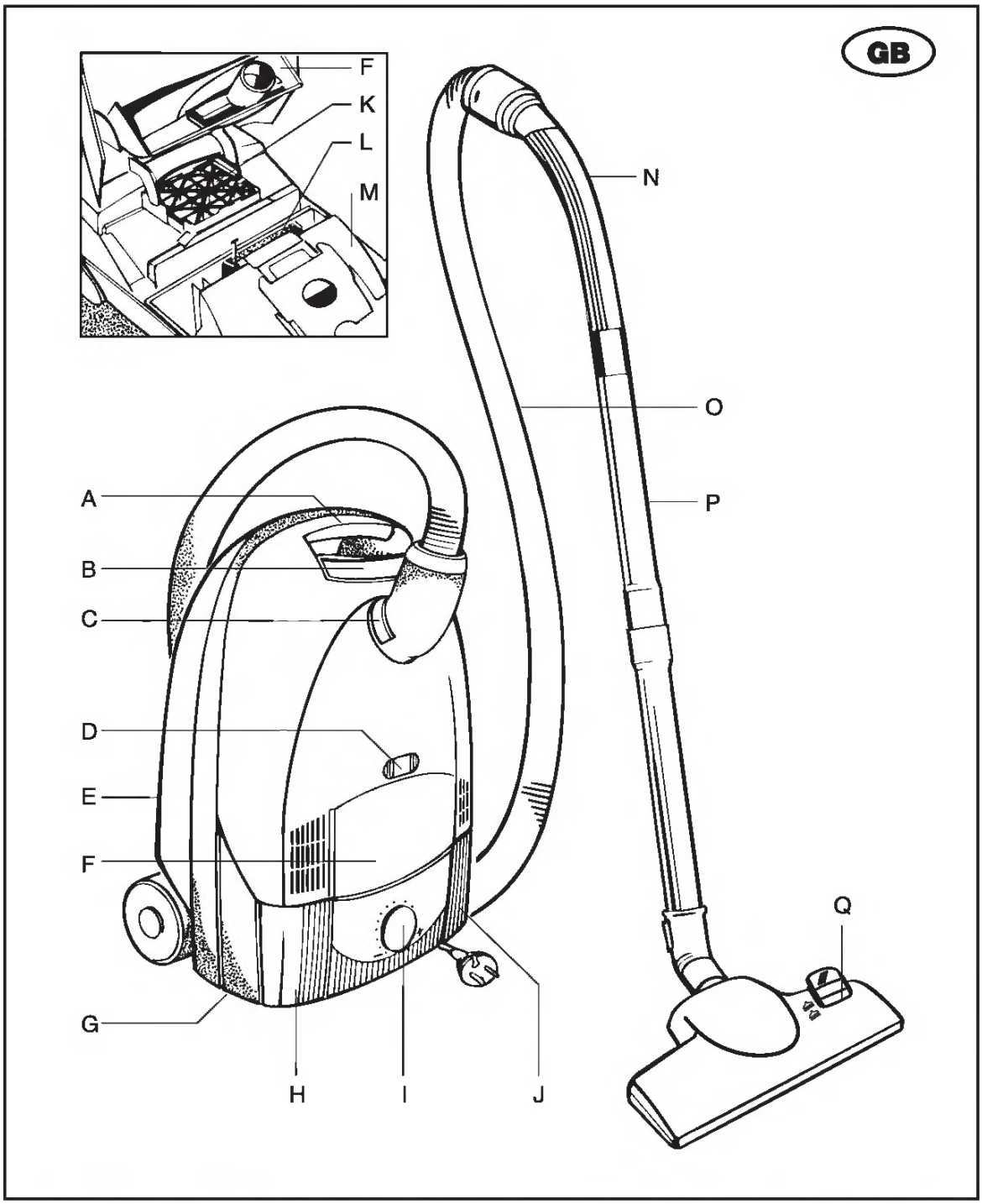

A = Carrying handle
B = Button to open the paper filter compartment
C = Hose release button
D = Filter replacement indicator
E = Tool rail
F = Accessories compartment*
G = Parking rail
H = On/Off button
I = Power adjuster*
J = Cable retraction button
K = Microfilter
L = HEPA filter/Motor protection filter*
M = Paper filter
N = Handle*
O = Suction hose
P = Suction tube*
Q = Nozzle*
*depending on model

Downloaded from www.Manualslib.com manuals search engine

Tab. 1 Parameter Table

PAR.	OESCRIPTION	RANGE	OEFAULT*	VALUE**	LEVEL***	U.M.
	COMPRESSOR REGULATOR (folder with "CP" label)					
diF	diFferential. Relay compressor tripping differential. The compressor stops on reaching the 5etpoint value (as indicated by the adjustment probe), and restarts at temperature value equal to the 5etpoint plus the value of the differential. Note: the value 0 cannot be assumed.	1...30	2		1	°C/°F
H5E	Higher 5Et. Maximum possible setpoint value.	L5E..302	99		1	°C/°F
L5E	Lower 5Et. Minimum possible setpoint value.	-55...H5E	-50		1	°C/°F
	COMPRESSOR PROTECTIVE OEVICE (folder with "CP" label)					
Ont (1)	On time (compressor). Compressor activation time in the event of faulty probe. If set to "1" with Oft at "0" the compressor is always on, while at Oft >0 it functions always in duty cycle mode.	0...250	0		1	min
OFt (1)	OFF time (compressor). Compressor in disabled state time in the event of a faulty probe. If set to "1" with Ont at "0" the compressor is always off, while at Ont >0 it functions always in duty cycle mode.	0...250	1		1	min
dOn	delay (at) On compressor. Delay time in activating the compressor relay after switch-on of instrument	0...250	0		1	sec
dOF	delay (after power) OFF. Oelay after switch off; the indicated time must elapse between switch-off of the compressor relay and the successive switch-on.	0...250	0		1	min
dbi	delay between power-on. Oelay between switch-ons; the indicated time must elapse between two successive switch-ons of the compressor.	0...250	0		1	min
OdO	delay Output (from power) On. Oelay time in activating the outputs after switch-on of the instrument or after a power failure.	0...250	0		1	min
	OEFROSTING REGULATOR (folder with "dEF" label					
dit	defrost interval time. Interval between the start of two successive defrosting operations.	0...250	6h		1	hours
dCt	defrost Counting type. 5election of count mode for the defrosting interval. 0 = compressor operating hours (DIGIFROST® method); 1 = Real Time – appliance operating time; 2 = compressor stop.	0/1/2	1		1	flag
dOH	defrost Offset Hour. 5tart-of-defrosting delay time from start up of instrument.	0...59	0		1	min
dEt	defrost Endurance time. Defrosting time-out; determines duration of defrosting.	1...250	30min		1	min
dPO	defrost (at) Power On. Determines if at the start-up the instrument must enter defrosting (if the temperature measured allows this operation). y = yes; n = no.	n/y	n		1	flag
	OISPLAY (folder with "diS" label)					
LOC	(keyboard) LOCk. Keyboard locking. However, you can enter parameter programming modify them along with the status of this parameter in order to allow keyboard locking. y = yes; n = no	n/y	n		1	flag
PA1	PAssword 1. When enabled (value other than 0) it constitutes the access key for level 1 parameters.	0...250	0		1	num
CA1	CAlibration 1. Positive or negative temperature value added to the value read by probe 1.	-12...12	0		1	°C/°F
ddL	defrost display Lock. Viewing mode during defrosting. 0 = shows the temperature read by the thermostat probe; 1 = locks the reading on the temperature value read by thermostat probe when defrosting starts, and until the next time the 5etpoint value is reached; 2 = displays the label "deF" during defrosting, and until the next time the 5etpoint value is reached.	0/1/2	1		1	flag
dro	display read-out. 5elect °C or °F for displaying the temperature read by the thermostat probe. 0 = °C, 1 = °F.	0/1	0		1	flag
	CONFIGURATION (folder with "CnF" label)					
H00 (*)	Probe type selection, PTC or NTC. 0 = PTC; 1 = NTC.	0/1	0/1		1	flag
reL	reLease firmware. Device version: read only parameter.	/	/		1	/
tAb	tAble of parameters. Reserved: read only parameter.	/	/		1	/
	COPY CARD (folder with "Fpr"label)					
UL	Up load. Programming parameter transfer from instrument to Copy Card.	/	/		1	/
dL	Down load. Programming parameter transfer from Copy Card to instrument	/	/		1	/
Fr	Format. Erasing all data in the copy card.	/	/		1	/
	PLEASE NOTE: using "Fr" parameter (copy card formatting) the data within the copy card will be lost permenently. The operation cannot be cancelled.					

(1) see Outy Cycle Oiagram

* OEFAULT column: for H00 parameter default is depending on model
*** NOTE 1: Switch off and switch on again the instrument after changing the input type NTC/PTC (par. H00)**

** VALUE column: to be filled manually, with customized settings (if different from the default value).
*** LEVEL column: indicates the level of visibility of parameters accessible by PAS5WORD (see the related paragraph)

Downloaded from www.Manualslib.com manuals search engine

Description

—Front Panel—

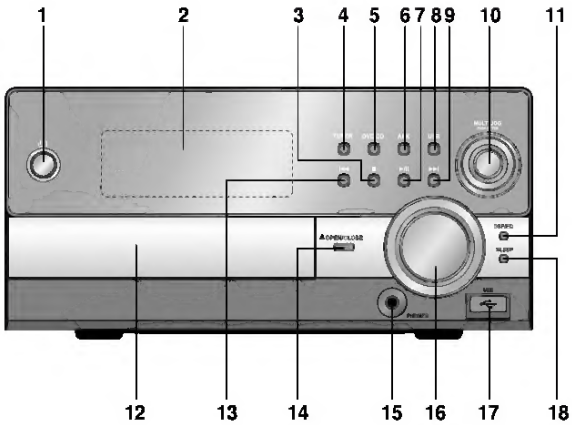

1. POWER (⏻/I) BUTTON
2. WINDOW DISPLAY
3. STOP (■) BUTTON
4. TUNER BUTTON
5. DVD/CD BUTTON
6. AUX BUTTON
7. PLAY/PAUSE (▶/II) BUTTON
8. USB BUTTON
9. TUNING UP & SKIP (▶▶I) BUTTONS
10. MULTI JOG
11. DSP/EO BUTTON
12. CD DOOR
13. TUNING DOWN & SKIP (I◀◀) BUTTONS
14. OPEN/CLOSE BUTTON
15. HEADPHONE JACK
16. VOLUME CONTROL
17. USB CONNECTOR
18. SLEEP BUTTON

—Rear Panel—

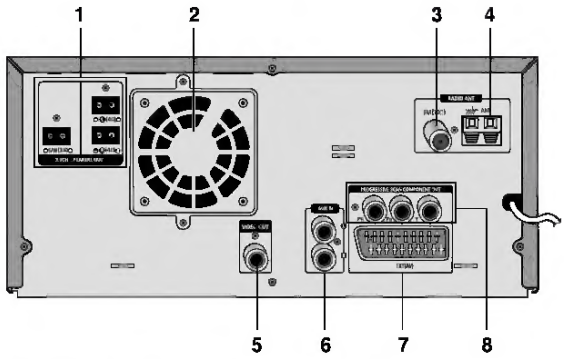

1. **2.1 Channel Speaker Output Terminals**
2. **Cooling Fan**
3. **AM Antenna Connectors**
4. **FM Antenna Connector**
5. **Video Output Connector**
   Connect the TV's video input jacks (VIDEO IN) to the VIDEO OUT connector.
6. **AUX-Input**
7. **Scart Connector**
   Connect to a TV with scart input connector.
8. **COMPONENT VIDEO OUTPUT Jacks**
   Connect a TV with component video inputs to these jacks.

Accessories

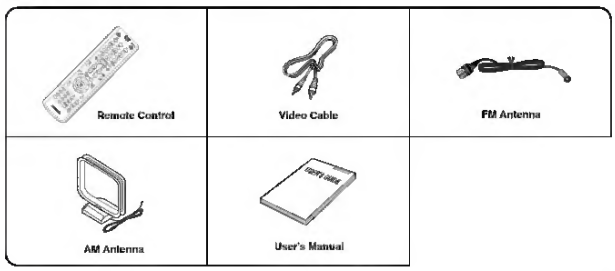

Downloaded from www.Manualslib.com manuals search engine

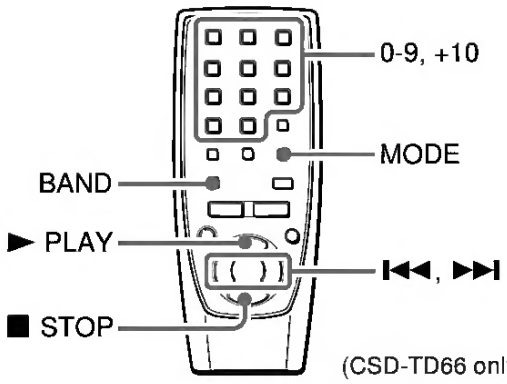

PRESETTING STATIONS

You can preset up to 15 stations in each band.

1 Select a station.

2 Press * ■ STOP/MEMORY once so that "M" is displayed to store the station.
A station is assigned a preset number, beginning from 1 in consecutive order for each band.

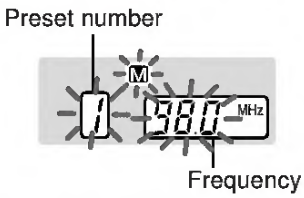

* or ■ on the remote control (CSD-TD66 only)

3 Repeat steps 1 and 2.
The next station will not be stored if a total of 15 preset stations have already been stored for a band.

To listen to preset stations
Select a band then press ►II PLAY/PAUSE/PRESET repeatedly.
► PLAY on the remote control is also available (CSD-TD66 only).

To select a preset number directly with the remote control (CSD-TD66 only)
Press the numbered buttons 0-9 and +10.
Example:
To select number 15, press +10 and 5.
To select number 10, press +10 and 0.

To clear a preset station
Select the preset number first. Within 4 seconds, keep ■ pressed until "M" and the preset number disappear in the display.
The higher numbers in the band are decreased by one.

Remote Control (CSD-TD66 only)

Insert two R6 (size AA) batteries.

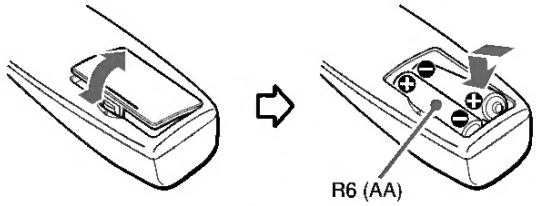

When the reach of the remote control signal is less than 5 meters (16 feet), replace the batteries.

The remote control may not operate correctly when:
- The unit is exposed to intense light, such as direct sunlight
- Objects block the remote control signal to the unit

To use the buttons on the remote control
Buttons on the remote control and the main unit with identical indications have the same functions.

To turn the power on
Press POWER to turn on the display.
When using the unit on the batteries, this button will not turn the power on.

To turn the power off
Press POWER to turn off the display.
When one of the deck operation buttons is pressed, this button will not turn the power off.

To use the FUNCTION button
Each time FUNCTION is pressed while the power is on, the function is selected cyclically.

→ CD → RADIO → *TAPE ┐

* applicable when one of the deck operation buttons is pressed

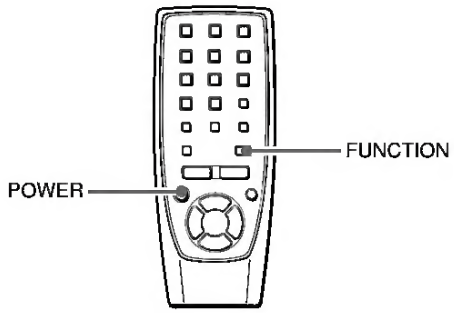

En

Downloaded from www.Manualslib.com manuals search engine

GB

Storing

It is practical to replace frozen products into the storing compartments (drawers) after freezing has finished so that to make room in the freezing compartment for another freezing.

Intermediate freezing does not deteriorate foods already stored.

How to make ice cubes

To make ice cubes fill the enclosed ice cube tray with water and place it to the frozen food compartment. Wetting the bottom of the tray and setting thermostatic control knob to maximum stage can shorten preparing time. After finishing do not forget to reset the thermostatic control to the suitable setting.

To release the ice cubes hold the tray under running water then twist the tray.

Some useful information and advice

- After opening and closing the door of the freezer, vacuum will rise inside the appliance because of the low temperature. So wait 2-3 minutes after closing the door while inner pressure equalises.
- Take care of operating the freezer at a position of thermostatic control so that the inside temperature can never go beyond -18 °C, since temperature higher than this can deteriorate frozen foods.
- It is practical to make sure of faultless operation of the appliance daily so as to notice possible failure in time and prevent deterioration of frozen foods.
- After a power failure the product will restart and the quick freeze function will be switched on.

Freezing and storage of frozen foods

- As freezing with "No-Frost" technology is quicker, the foods frozen this way will preserve their original form, nutritional value and taste even after thawing.
- Place the foods to be frozen in the lower part of the product.
- For the perfect operation of the product, make sure that the frozen foods will not touch the ventilator cover or the ventilator mounted on the backside of the product.
- For the best results it is recommended to distribute the frozen foods evenly in the boxes.
- If you make small portions of the foods, the freezing process will take less time and subsequent thawing will be possible in small portions also.
- In order to avoid freezing burns, do not touch ice-creams immediately after they have been taken out from the freezer.
- It is recommended to state the freezing date on the package in order to check the storage duration.
- The time of transportation from the seller to the consumer must be as short as possible.

Hints and ideas

In this chapter practical hints and ideas are given about how to use the appliance to reach maximum energy saving and there is environmental information about the appliance as well.

How to save energy

- Avoid putting the appliance in a sunny place and near anything that gives off heat.
- Be sure that the condenser and the compressor are well ventilated. Do not cover the sections where the ventilation is.
- Wrap products in tightly closing dishes or cling film to avoid building up unnecessary frost.
- Avoid products put in the freezer compartment touching foods already frozen.
- Do not leave the door open longer than necessary and avoid unnecessary openings.
- Put warm foods into the appliance only when they are at room temperature.
- The condenser must be kept clean.

The appliance and environment

This appliance does not contain gasses which could damage the ozone layer, in either its refrigerant circuit or insulation materials. The appliance shall not be discarded together with the urban refuse and rubbish. Avoid damaging the cooling unit, especially at the rear near the heat exchanger. Information on your local disposal sites may be obtained from your municipal authorities.

The materials used on this appliance marked with the sympol ♻ are recyclable.

Maintenance

Automatic defrosting

This product is designed to avoid the formation of ice in the freezer. Accordingly, there is no need for manual defrosting. The product will automatically perform any defrosting once it becomes necessary.

No-Frost technology

In order to facilitate the removal of the ice layer, the evaporator is assisted by electric heating during the defrosting procedure. The ventilator is in OFF position. The defrost water will drip in the tray placed at the compressor and will evaporate. In the course of the defrosting procedure (approx. 30 minutes) the evaporator becomes warm but it has no influence on the internal temperature.

The foods should be kept well-packed in order to avoid any moisture loss as a result of air circulation.

Do not obstruct the vent holes because otherwise the operability of the product may be compromised.

For such purpose it is recommended to put all foods in the drawers in the freezer compartment.

Downloaded from www.Manualslib.com manuals search engine

OPERATION USING ADJUSTABLE DIAL SWITCH

To adjust desired temperature and program the timer.

Select the desired temperature by turning Adjustable Dial Switch when using the unit in cooling or heating function. The desired temperature range is from 61ºF-88ºF (16ºC-31ºC). The LED flashes to display the desired temperature during the setting, it displays the room temperature after 5 seconds, .

Press Timer On/Off button, turn adjustable dial switch to change the clock to the desired time for the unit being turned on or off.

ADJUSTABLE and OSCILLATING LOUVERS

Manual Horizontal Louvers

Automatic Oscillating Louvers

REMOTE CONTROL PREPARATIONS & OPERATION

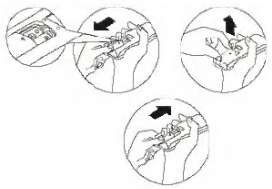

1. **Remove the cover from the back of the remote control.**
2. **Insert two AAA dry-cell batteries (batteries included)**
3. **Insert the power plug into an outlet.**
4. **Always point the remote control signal transmitter toward the unit when operating.**
5. **Make sure that the signal path is not obstructed.**
6. **The maximum distance at which signals can be received is 26.24 feet.**
7. **Remove the batteries if the unit is not going to be used for an extended period of time.**

NOTE:

1. Do not abuse the remote control.
2. Do not place the remote control in a location that is exposed to direct sunlight or next to a heating unit or other heat source.
3. Do not use rechargeable batteries because they differ from standard dry cell batteries in shape, dimension and performance.
4. Be sure to replace the batteries with two new batteries of the same type.

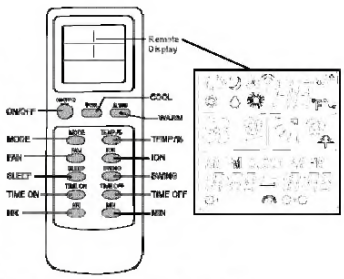

REMOTE CONTROL FUNCTIONS

1. **ON/OFF-**
   Starts or Stops the Unit
2. **WARMER**
   Adjust to desired warm temperature.
3. **COOLER**
   Adjust to desired cool temperature.
4. **MODE**
   Select the functions of the unit for: Fan Mode, Air Conditioning Mode, Heating Mode, Dehumidifying Mode and Auto Mode
5. **TEMP./%**
   To display temperature or humidity on both Main LED and LED. Hold the button more than 3 seconds, to convert the temperature display from Fahrenheit (ºF) to Celsius (ºC) and vice versa. Press the button for less 3 seconds to view the humidity.
6. **FAN**
   Select the fan speed desire: High, Medium and Low The fan speed can be visually distinguished by the speed of the digital air segments progressing out from the wind mill fan image on the Main LED display.
7. **SWING**
   To start swinging air louvers horizontally by press SWING Button once. appears on the Main LED display. To stop, press SWING again. Vertical air flow direction can be adjusted manually.
8. **SLEEP BUTTON**
   Press to select the function of the unit for Sleep Mode.
9. **ION BUTTON**
   Press the Ion Button until appears on the Main LED display, press again to stop.

EXHAUST KIT INSTALLATION

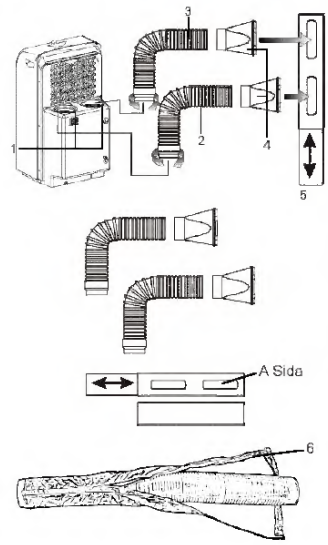

WINDOW INSTALLATION

1. Exhaust Ports
2-3. Air Outlet / Inlet Hoses: Extends from 17" (43cm) up to 5.9 ft (1.8m)
4. Window Exhaust Adapter (2)
5. Adjustable Window Panel
6. Insulated sleeves

Window Kit: Extends from 28.375" (72cm) up to 55.625" (140cm)

NOTE: Air outlet hose should be mounted at A side

Horizontal

Vertical

NOTE: Your window kit has been designed to fit most standard vertical and horizontal window applications. However, it may be necessary for you to improvise/modify some aspects of the installation procedures for certain types of windows. Please refer to measurements below:

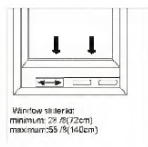

1) Select a suitable location, making sure you have easy access to an electrical outlet.
2) Remove the 2 hoses, 2 window exhaust adapters, t window panel kit.
3) Insert the end of the hose with the round connector into either the air inlet or air outlet hole on the back of the unit. Turn the hose clockwise to secure the hose into the hole. Do this for both hoses.
4) Screw the window exhaust adapters on both hoses by turning them clockwise.
5) Insert the air inlet window exhaust Adapter into the left hole of the window panel kit. Then insert the air outlet window exhaust Adapter in the right hole of the window panel kit.

NOTE: When operating the unit in **HEAT MODE**, stretch out the exhaust hose(s) to their full length, and wrap the insulated sleeves (6) around the hoses and secure with the velcro. **Do this before installing the flexible hoses into the air inlet and outlet ports on the back of the unit.**

NOTE: 2. While operating or installing, the hoses should not be blocked by curtains or any other obstructions.

Downloaded from www.Manualslib.com manuals search engine

Appliance Description

Features of the hob

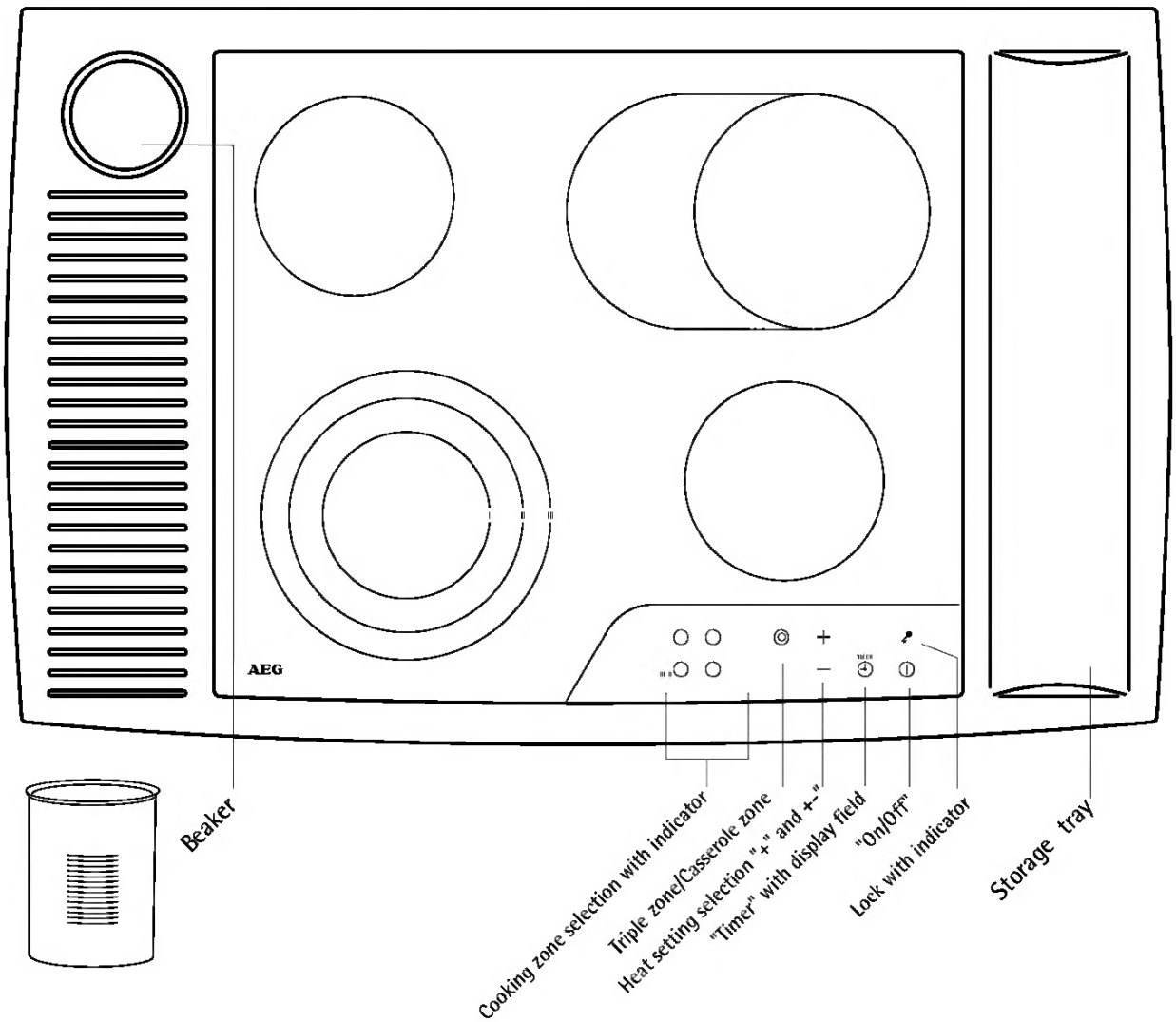

Cooking zone dimensions:

rear left:	145 mm
rear right:	170/265 mm
front left:	210/175/120 mm
front right:	145 mm

Downloaded from www.Manualslib.com manuals search engine

Remote control

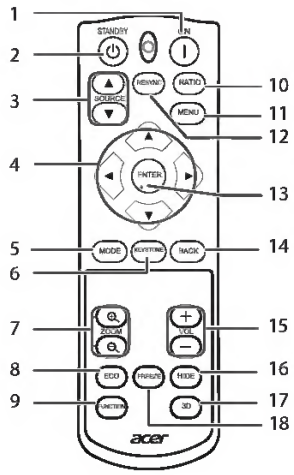

1. ON button
   For turning the power on.
2. STANDBY button
   For putting the projector into the Standby mode.
3. SOURCE buttons
   For switching Input mode.
4. Adjustment buttons (▲/▼/◀/▶)
   For selecting and adjusting menu items.
5. MODE button
   For selecting the appropriate picture.
6. KEYSTONE button
   For entering the Keystone Correction mode.
7. ZOOM buttons
   For enlarging/reducing part of the image.
8. ECO button
   For lowering the noise of the cooling fan.
9. FUNCTION button
   For operating and executing a function assigned to "FUNCTION Button".
10. RATIO button
    For switching the picture size (NORMAL, 16:9, etc.).
11. MENU button
    For displaying adjustment and setting screens.
12. RESYNC button
    For automatically adjusting images when connected to a computer.
13. ENTER button
    For setting items selected or adjusted on the menu.
14. BACK button
    For returning to the previous menu screen during menu operation.
15. VOL +/- (Volume) buttons
    For adjusting the speaker sound level.
16. HIDE button
    For temporarily displaying a black screen and turning off the sound.
17. 3D button
    For displaying the 3D mode menu screen.
18. FREEZE button
    For freezing images.

BASIC OPERATIONS

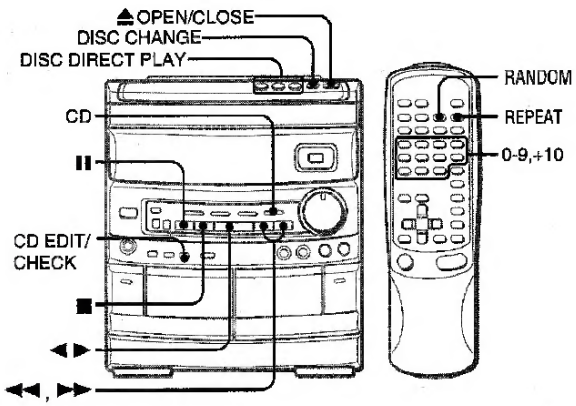

LOADING DISCS

Press the CD button, then press the ⏏ OPEN/CLOSE button to open the disc compartment. Load disc(s) with the label side up.

To play one or two discs, place the discs on tray 1 and 2.

To play three discs, press the DISC CHANGE button to rotate the trays after placing two discs. Piece the third disc on trey 3.

Close the disc compartment by pressing the ⏏ OPEN/CLOSE button.

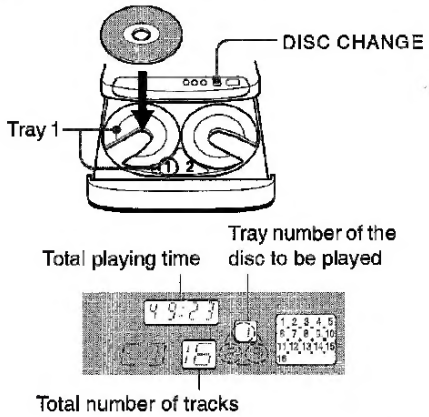

PLAYING DISCS

Load discs.

To play all discs in the disc compartment, press the ◄► button.

Play begins with the disc on tray 1.

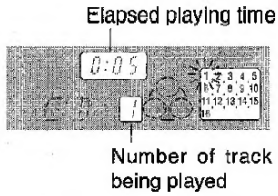

To play one disc only, press one of the DISC DIRECT PLAY buttons.

The selected disc is played once.

To stop play, press the ■ button.

To pause play, press the II button. To resume play, press agein.

To search for a particular point during playback, keep the ◄◄ or ►► button pressed and release the button at the desired point.

To skip to the beginning of a treck during pleyback, press the ◄◄ or ►► button repeatedly.

To remove discs, press the ⏏ OPEN/CLOSE button.

To stert play when the power is off (Direct Play Function)

Press the CD button. The power is turned on end pley of the loaded disc(s) begins.

To replece discs before play, press the ⏏ OPEN/CLOSE button to open the disc compartment.

To check the remaining time

Press the CD EDIT/CHECK button during pley. The emount of time remaining until ell tracks finish playing is displayed. To restore the play time display, repeat the above again.

Selecting s track with the remote control

1 Press one ot the DISC DIRECT PLAY buttons to select e disc.
2 Press the numeric buttons and the +10 button to select a track.
Example:
To select the 25th treck, press the +10, +10 and 5 buttons.
To select the 10th track, press the +10 and 0 buttons.
The selected track starts to play and continues to the end of thet disc.

Rsplacing discs during play

While one disc is pleying, the other discs cen be repleced without interrupting play.

1 Press the DISC CHANGE button.
2 Remove the discs and replace with other discs.
3 Press the ⏏ OPEN/CLOSE button to close the disc compartment.

NOTE

- When loeding en 8-cm (3-inch) disc, put it onto the inner circle of the tray.
- Do not place more than one compect disc on one disc trey.
- Do not tilt the unit with discs loaded. Doing so may cause malfunctions.

Downloaded from www.Manualslib.com manuals search engine

Maintenance and Care

- **The hood must always be disconnected from the electricity supply before beginning any maintenance work.**

Cleaning the hood

- Clean the outside of the hood using a damp cloth and a solution of water and mild washing up liquid.
- Never use corrosive, abrasive or flammable cleaning products or products containing bleach. .
- Never insert pointed objects in the motor's protective grid.
- Only ever clean the switch panel and filter grill using a damp cloth and mild washing up liquid.
- It is extremely important to clean the unit and change the filters at the recommended intervals. Failure to do so will cause grease deposits to build up that could constitute a fire hazard.

Downloaded from www.Manualslib.com manuals search engine

English

I/O interface	• ExpressCard™/54 slot • 6-in-1 card reader (SD/MMC/MMC*plus*™/MS/MS PRO/xD) • USB 2.0 port • USB 2.0 / eSATA port* **Note:** If you plug an eSATA device you will have two USB ports available in the mean time. • Consumer infrared (CIR) port • HDMI™ port with HDCP support* • External display (VGA) port • Headphones/speaker/line-out jack with S/PDIF support* • Microphone-in jack • Line-in jack • Ethernet (RJ-45) port • Modem (RJ-11) port • DC-in jack for AC adapter

Environment	• Temperature:
	  • Operating: 5 °C to 35 °C
	  • Non-operating: -20 °C to 65 °C
	• Humidity (non-condensing):
	  • Operating: 20% to 80%
	  • Non-operating: 20% to 80%

Note: * Only for certain models

Note: The specifications listed above are for reference only. The exact configuration of your PC depends on the model purchased.

Downloaded from www.Manualslib.com manuals search engine

5-5

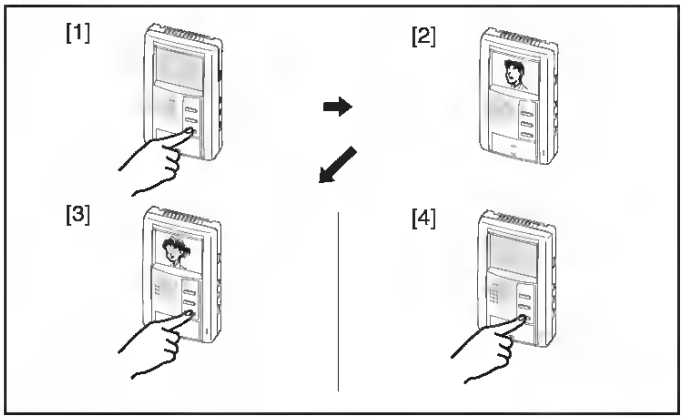

Monitoring door station — English

1. Momentarily depress MONITOR button.
2. Video monitor turns on image of DOOR 1.
3. Press MONITOR button again to switch to DOOR 2.
4. Press MONITOR button to end monitoring.

NOTES: 1. Inside audio can not be heard at door station.
2. Press TALK button to establish talk channel with door station.
3. The monitoring image automatically turns off in approx 1 min.
4. When DOOR 2 is audio-only type (JA-D), it is skipped while monitoring, and audio can not be heard.

Surveillance du poste de porte — Français

1. Appuyer brièvement sur le bouton moniteur.
2. Le moniteur vidéo affiche l'image du portier 1.
3. Appuyer à nouveau sur le bouton moniteur pour passer au portier 2.
4. Appuyer sur le bouton moniteur pour terminer.

REMARQUES: 1. Les bruits intérieurs ne peuvent être entendus de l'extérieur en mode surveillance.
2. Appuyer sur le bouton PAROLE pour établir la communication avec le poste de porte.
3. La surveillance vidéo s'éteint automatiquement après 1 min. environ.
4. Si le portier 2 est du type audio (JA-D) uniquement, il est ignoré pendant la surveillance et le sont ne peut être entendu.

Monitor-Funktion — Deutsch

1. Kurz auf die MONITOR-Taste drücken.
2. Der Monitor zeigt das Bild der TÜRSTELLE 1.
3. Um zur TÜRSTELLE 2 zu gelangen, die MONITOR-Taste erneut drücken.
4. Die MONITOR-Taste erneut drücken, um die Videoüberwachung zu beenden.

HINWEIS: 1. Innengeräusche können an der Türsprechstelle nicht gehört werden.
2. Auf die SPRECH-Taste drücken, um die Sprechverbindung zur Türsprechstelle zu aktivieren.
3. Die Monitor-Funktion schaltet sich automatisch nach ca. 1 Min. ab.
4. Wenn als TÜRSTELLE 2 nur eine JA-D installiert ist, kann von innen keine Verbindung aufgebaut werden.

Monitorear el portero — Español

1. Presione el botón MONITOR momentáneamente.
2. Se encenderá el vídeomonitor y se verá la imagen de PUERTA 1.
3. Presione de nuevo el botón MONITOR para cambiar a PUERTA 2.
4. Presione el botón MONITOR para apagarlo.

NOTAS: 1. El sonido del interior no puede oírse en el portero.
2. Presione el botón HABLA para establecer el canal de comunicación con el portero.
3. La imagen del monitor se apaga automáticamente en 1 minuto aprox.
4. Si la PUERTA 2 es de tipo sólo audio (JA-D), no aparecerá en imagen y tampoco podrá oírse la voz.

Toezicht deurpost — Nederlands

1. Druk kort de MONITOR-knop in.
2. Video-monitor toont beeld van DEUR 1.
3. Druk opnieuw MONITOR-knop in om over te schakelen naar DEUR 2.
4. Druk nogmaals op de MONITOR-knop om te beëindigen.

OPMERKINGEN;
1. Geluid van binnen is niet hoorbaar op de buitenpost.
2. Druk op de SPREEK-knop om spreken met de buitenpost mogelijk te maken.
3. Het beeldscherm wordt na ongeveer 1 min. automatisch uitgeschakeld.
4. Als DEUR 2 enkel een audio-type is (JA-D) wordt deze overgeslagen tijdens het toezicht en wordt het geluid van deze deurpost niet gehoord.

5-6

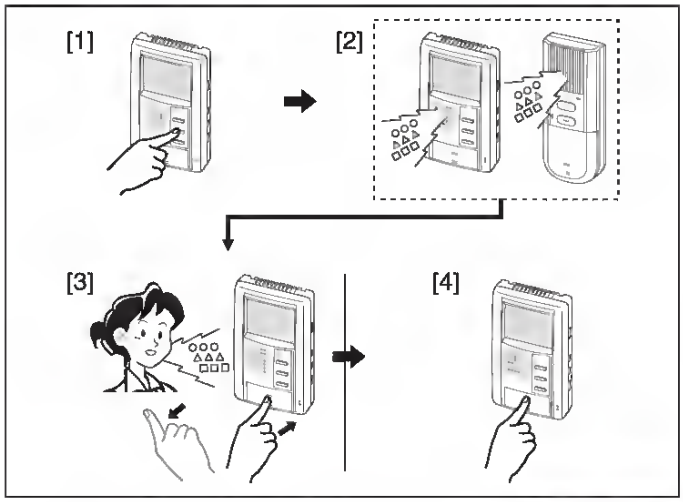

Room-to-Room communication — English

1. Press CALL button once. Call verbally the rest station(s).
2. The called station(s) sounds a pretone and voice.
3. To answer, press TALK button once, and reply handsfree.
4. At the end, press TALK button.

NOTES: Communication is approx. 1 min.-timed.

Communication de pièce à pièce — Français

1. Appuyer une fois sur le bouton d'appel. Appeler verbalement l'(les) autre(s) poste(s).
2. Le(s) poste(s) appelé(s) émettent une pré-tonalité et la voix.
3. Pour répondre, appuyer sur le bouton PAROLE une fois et répondre en mains libres.
4. A la fin, appuyer sur le bouton PAROLE.

REMARQUES: La durée de la communication est d'environ 1 min.

Downloaded from www.Manualslib.com manuals search engine

SETTING THE CLOCK

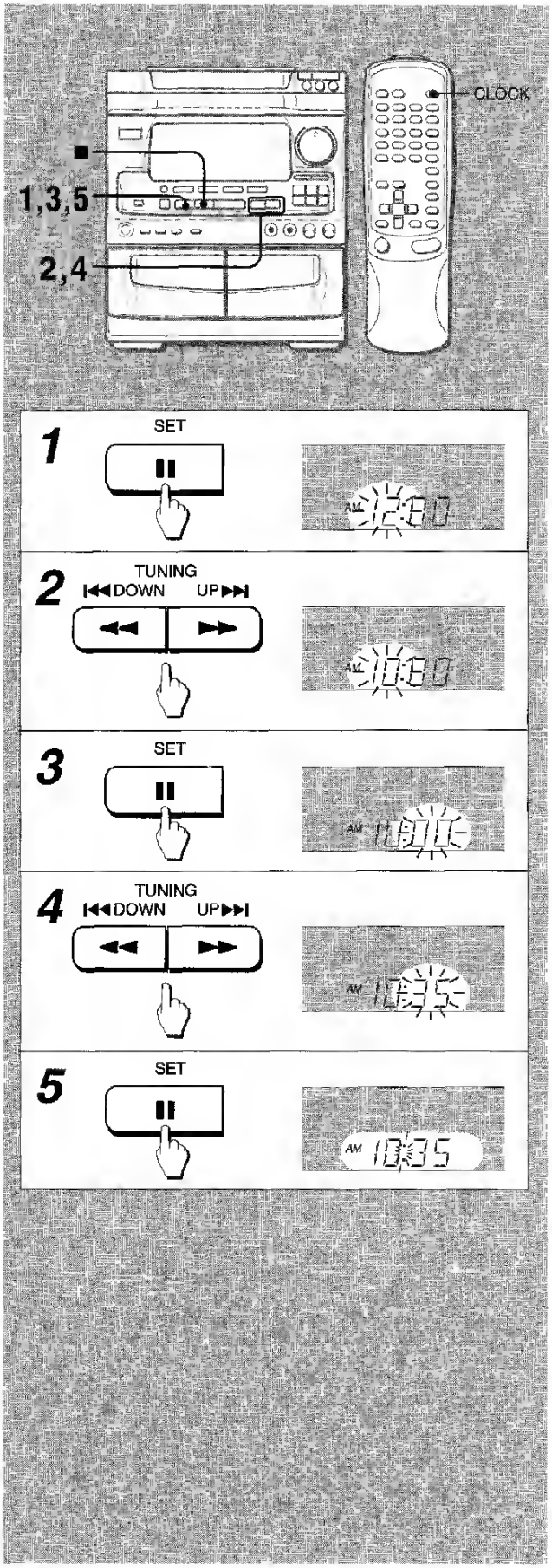

When the AC cord is connected tor the first time, the II SET button flashes.
Set the time as follows while the power is off.

1 **Press the SET button.**
The hour flashes.

2 **Press the ⏮ DOWN or ⏭ UP button to designate the hour.**

3 **Press the SET button to set the hour.**
The hour stops flashing and the minute starts flashing

4 **Press the ⏮ DOWN or ⏭ UP button to designate the minute.**

5 **Press the SET button to set the minute and complete setting.**
The minute stops flashing on the display and the clock starts from 00 second.

To correct the current time
Press the POWER button to turn the unit off. Press the II SET button and carry out steps 1 to 5 above.

To display the current time
Press the CLOCK button on the remote control. The clock is displayed for 4 seconds.
However, the time cannot be displayed during recording.

To switch to the 24-hour standard
Press the CLOCK button on the remote control and then press the ■ button within 4 seconds.
Repeat the same procedure to restore the 12-hour standard.

If the clock display flashes while the power is off
This is caused by a power interruption. The current time needs to be reset.
If power is interrupted for more than approximately 24 hours, all settings stored in memory after purchase need to be reset.

Downloaded from www.Manualslib.com manuals search engine

Step 3 Click on the **Print Test Page** button. Windows should print out a test page.

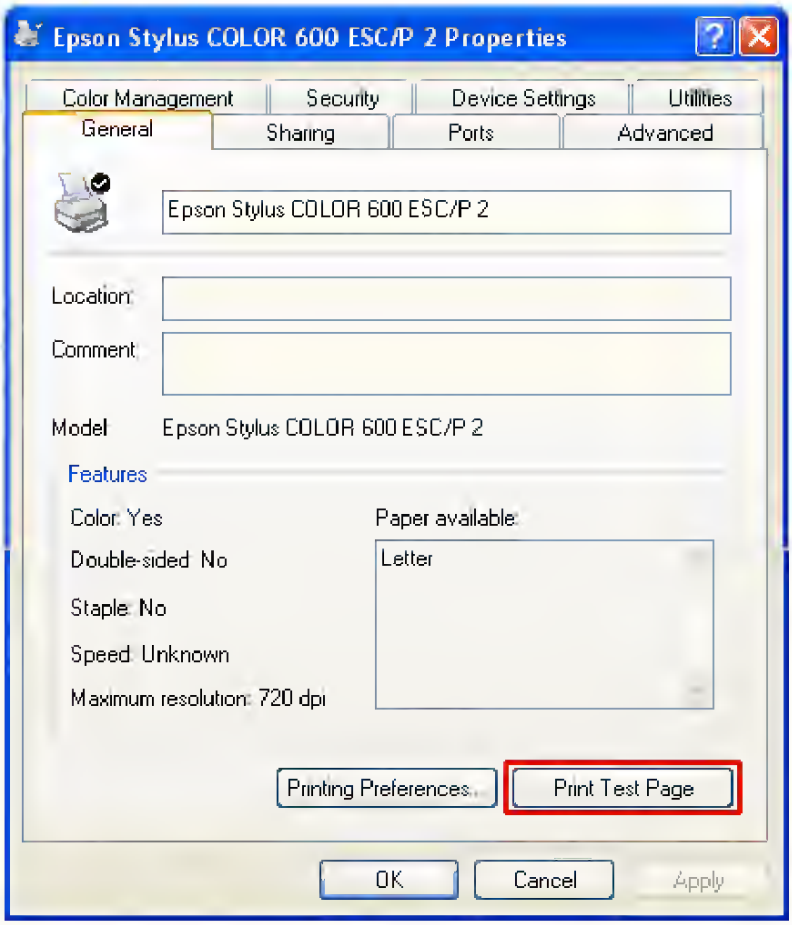

You have successfully configured the Print Server for printing.

Downloaded from www.Manualslib.com manuals search engine

The NVRAM does not require a back up battery so that you can eliminate the threat of data loss due to a dead battery, as well as avoid hardware damage due to electrolyte leakage.

2.10 Factory Default Profile (FDP)

The FDP is the default configuration profile stored in your modem read-only memory (ROM), which can not be modified by the user. The FDP is intended for rescuing the modem in case the user misconfigures the modem settings.

To display the FDP, use command &F to place the profile into the active configuration area (ACA), then issue AT&V. Note that some modems may have more than one built-in FDP, in which case, each FDP serves as the default for a particular application requirement.

2.11 Stored Configuration Profile (SCP)

The SCP is the configuration profile stored in the NVRAM of the modem to be retrieved for later use.

Initially the factory sets the SCPs identically to the FDPs. To view all the SCP configurations, issue command &V. note that once an SCP is selected and loaded into ACA, it becomes the major SCP and provides the control characteristics of the modem.

If you hav edited the ACA and wish to write it to an SCP, issue a &W command. The modified configuration profile overwrites the original SCP and becomes the new SCP.

For information on the SCPs of your particular modem, refer to your Getting Started manual.

2.12 Major Stored Configuration Profile (Major SCP)

The major SCP is the SCP that is loaded into the ACA each time the modem is turned on or reset by ATZ. To designate an SCP as the major SCP, issue &Y followed by the SCP number. For example, issuing &Y1 designates SCP1 as the major SCP.

2.13 Active Configuration Area (ACA)

The ACA is a portion of the random-access-memory (RAM) in your modem that holds the configuration settings that determine the modem current operating characteristics.

Downloaded from www.Manualslib.com manuals search engine

Main Board Layout

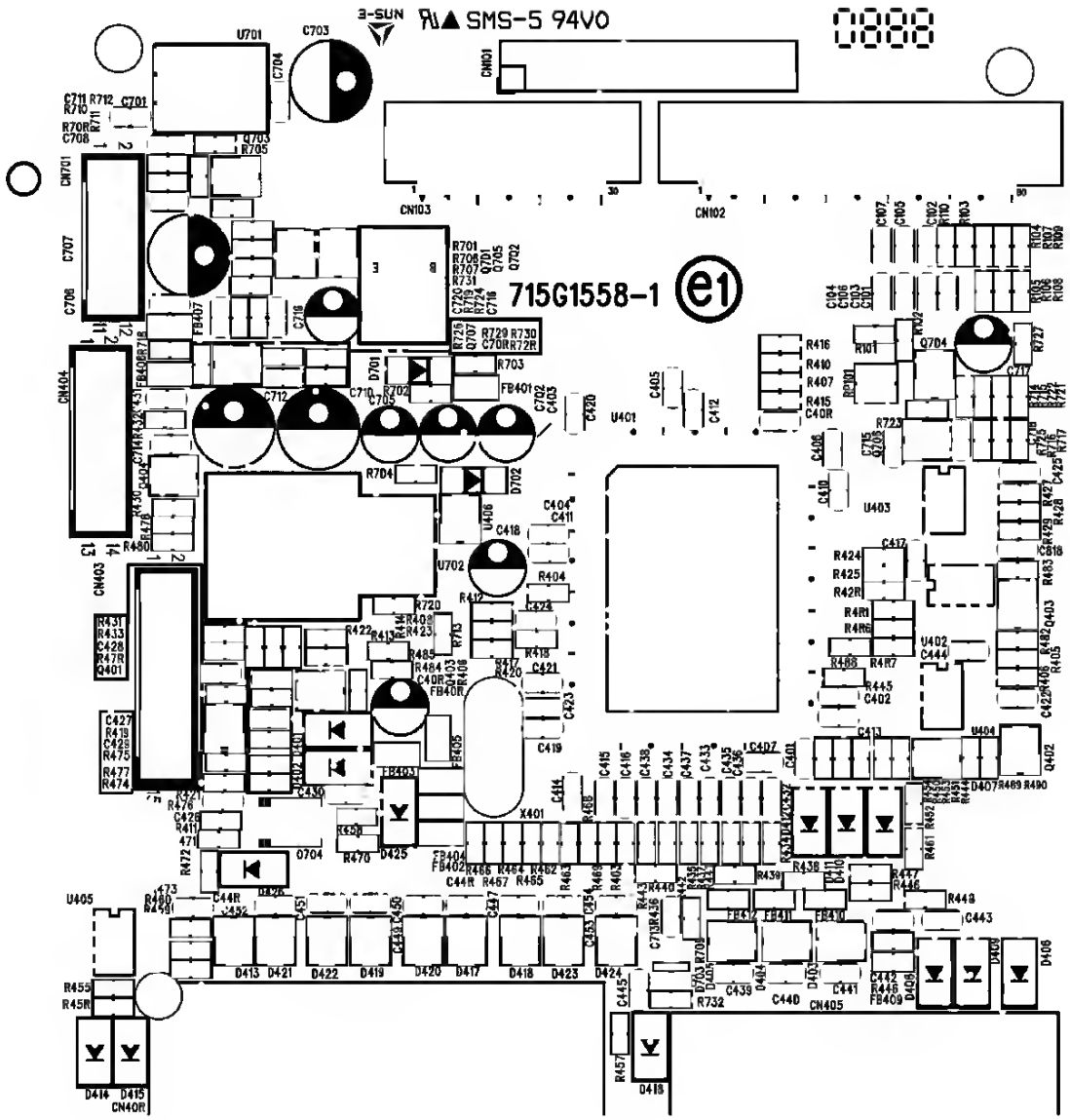

Label	Part Number	Description
U201	090G6093 1	HEAT SINK
U401	056G 562100	TSUM16AK
U702	056G 563 21	AP1084K33LA
U406	056G 643 5A	MAX810 STRG
U404	056G1133 34	M24C02-WMN6TP
U403	056G1133 56	M24C16-WMN6TP
CN901	087G 501 32 S	AC SOCKET
CN902	095G8014 12 42	HARNESS
CN102	033G8032 4C	WAFER
CN101	033G803412D	WAFER

Downloaded from www.Manualslib.com manuals search engine

5 **Quand l'ampli-tuner n'est pas utilisé** — Débranchez l'ampli-tuner de la prise murale si vous prévoyez de ne pas l'utiliser pendant plusieurs mois. Quand le cordon est branché, une petite quantité d'électricité s'écoule vers même s'il est hors tension.

Antenne extérieure

1 **Lignes électriques** — Quand vous raccordez une antenne extérieure, assurez-vous qu'elle est suffisamment éloignée des lignes électriques.

2 **Prise de terre de l'antenne extérieure** — Assurez-vous que l'antenne est raccordée correctement à la terre par mesure de protection contre les pointes de tension et l'accumulation de charges statiques. L'article 810 du Code Electrique National, ANSI/NFPA70, fournit des informations pour une mise à la terre correcte des mâts et supports, la mise à la terre du fil de connexion à un appareil de décharge, la dimension de l'appareil de décharge, la connexion des électrodes de terre et les exigences que doivent remplir les électrodes de terre.

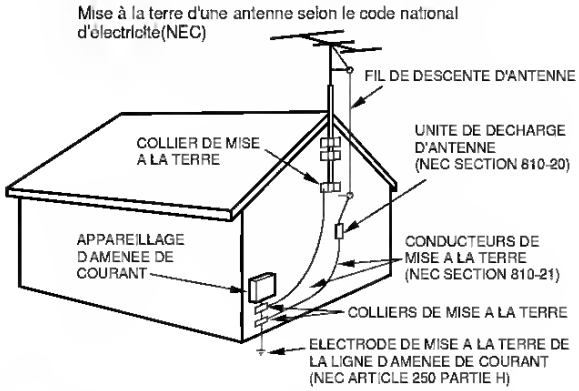

NEC: CODE NATIONAL D'ELECTRICITE

Entretien

Nettoyez l'ampli-tuner comme indiqué dans le mode d'emploi.

Réparations exigeant l'intervention d'un professionnel

Faites réparer l'ampli-tuner par un professionnel dans les cas suivants:

- Le cordon ou la prise secteur a été endommagé
- Des objets ou liquides sont tombés dans l'ampli-tuner
- L'ampli-tuner a été exposé à la pluie ou à l'eau
- L'ampli-tuner ne semble pas fonctionner correctement
- Les performances de l'ampli-tuner ne sont plus les mêmes
- L'ampli-tuner est tombé ou le coffret a été endommagé

NE PAS ESSAYER DE REPARER SOI-MEME LE RECEPTEUR.

Vérifiez vos accessoires

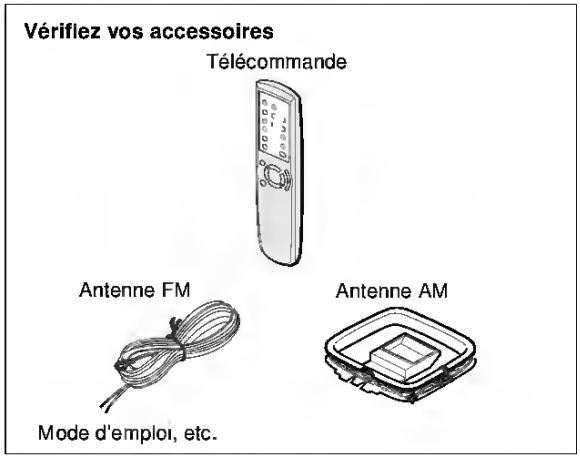

TABLE DES MATIERES

PRECAUTIONS 1

PREPARATIFS

RACCORDEMENTS 3
REGLAGE DE L'HORLOGE 6
AVANT DE COMMENCER 7

SON

REGLAGE PERSONNEL DU SON 8
EGALISEUR GRAPHIQUE ELECTRONIQUE 9

OPERATIONS DE BASE

SELECTION D'UNE SOURCE AUDIO OU VIDEO 9
ENREGISTREMENT D'UNE SOURCE AUDIO 10

RECEPTION RADIO

ACCORD MANUEL 11
PREREGLAGE DES STATIONS 12

MINUTERIE

REGLAGE DE LA MINUTERIE D'ARRET 12

GENERALITES

SPECIFICATIONS 13
SOIN ET ENTRETIEN 14
EN CAS DE PANNE 14
NOMENCLATURE 14

F

Downloaded from www.Manualslib.com manuals search engine

Disk Controllers

Compaq ProLiant ML370 servers include a standard disk controller with the following features:

- Integrated Dual Channel Wide Ultra2 SCSI Controller on the PCI local bus upgradeable to the Integrated Smart Array Controller
- Two SCSI ports supporting up to six internal, Wide Ultra2 SCSI hot-plug hard drives
- Support for up to three non-hot-plug SCSI devices or 15 external drives without using an expansion slot.
- Maximum data transfer rate of 80 megabytes per second (MB/s) on each SCSI bus.

Several optional controller boards for expanding storage capacity or running arrays are available from Compaq authorized resellers:

- Smart Array 221 Controller
- Smart Array 3200 Controller
- Smart Array 4200 Controller
- 64-Bit Dual Channel Wide Ultra2 SCSI Adapter
- Integrated Smart Array Controller supporting the following features:
  - 16 MB total memory, 8 MB Read-Ahead Cache
  - Support for up to six internal Wide Ultra2 SCSI hot-plug drives in RAID 0, RAID 1, RAID 0+1, and RAID 5
  - Support for external backup tape drives and external storage through the SCSI connector on the rear panel
  - Migration from any RAID level to any RAID level
  - Migration from any stripe size to any stripe size
  - Support for Low Voltage Differential (LVD) SCSI devices on both channels
  - Pre-Failure Notification and Pre-Failure Warranty through the Compaq Insight Manager
  - Online spares
  - Online capacity expansion

Downloaded from www.Manualslib.com manuals search engine
Compaq Confidential – Need to Know Required

Always pre-heat the empty oven with the grill functions for 5 minutes.

- Set the shelf in the shelf position as recommended in the grilling table.
- Always set the pan to collect the fat into the first shelf position.
- Grill only flat pieces of meat or fish.

Grilling

Food to be grilled	Shelf position	Temperature	Time in min.	
			1st side	2nd side
Roast beef	2	210 - 230	30 - 40	30 - 40
Filet of beef	3	230	20 - 30	20 - 30
Back of pork	2	210 - 230	30 - 40	30 - 40
Back of veal	2	210 - 230	30 - 40	30 - 40
Back of lamb	3	210 - 230	25 - 35	20 - 25
Whole Fish, 500-1000g	3/4	210 - 230	15 - 30	15 - 30

Fast Grilling

Food to be grilled	Shelf position	Time in min.	
		1st side	2nd side
Burgers	4	8 - 10	6 - 8
Pork fillet	4	10 - 12	6 - 10
Sausages	4	10 - 12	6 - 8
Fillet steaks, veal steaks	4	7 - 10	6 - 8
Toast [1)]	5	1 - 3	1 - 3
Toast with topping	4	6 - 8	-

1) Pre-heat the oven

Pizza Setting

Type of baking	Shelf position	Temperature °C	Time Min.
Pizza (thin crust)	2	200 - 230 [1)2)]	15 - 20
Pizza (with a lot of topping)	2	180 - 200	20 - 30
Tarts	1	180 - 200	40 - 55
Spinach flan	1	160 - 180	45 - 60
Quiche Lorraine	1	170 - 190	45 - 55
Swiss Flan	1	170 - 190	45 - 55
Apple cake, covered	1	150 - 170	50 - 60
Vegetable pie	1	160 - 180	50 - 60

Downloaded from www.Manualslib.com manuals search engine

Remote Control

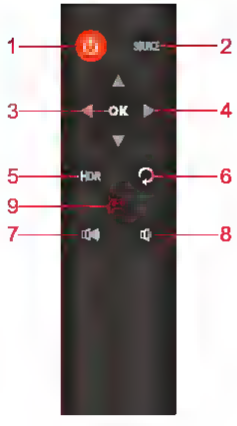

#	Icon	Item	Description
1		Power button	Turns the monitor on/off
2	SOURCE	Input button	Press to toggle input sources
3	OK	Confirm	Enter the selected item
4		Arrow key	Use the up, down, left and right buttons to select an item
5	HDR	HDR	Auto/On/Off HDR mode
6		Return	Exit the currently selected item
7		Volume "+"	Increase the volume
8		Volume "-"	Decrease the volume
9		Scene modes	Select the desired scene mode

Note: 1. Actual functions depend on models.
2. The function control buttons of the remote control are corresponding to the OSD menu control.

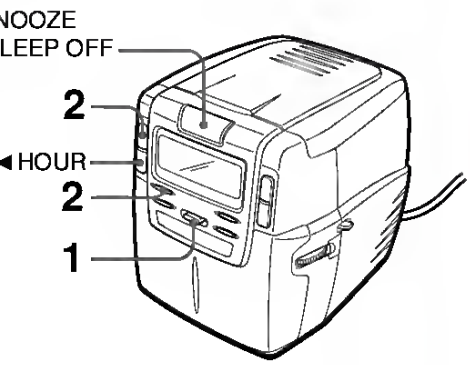

SLEEP TIMER SETTING

English

You can use the sleep timer to turn the radio off or to stop playing back a disc automatically after up to 1 hour 59 minutes.

• Before setting, tune in to a station or start CD play.

1 Set ALARM/POWER to ⏻ STANDBY.

2 While holding down SLEEP, press MIN to set the time to turn off the radio or stop playing back a disc.

To cancel the sleep timer, press SNOOZE/SLEEP OFF.

To set the time longer than 59 minutes

While holding down SLEEP, press HOUR once in step 2, then press MIN.

To use both the sleep timer and the alarm

You can fall asleep listening to the radio and still be awakened by the radio/buzzer alarm at a preset time.

1 Set the alarm timer referring to steps 1 – 2 on page 18.

2 While holding down SLEEP, press MIN to set the sleep timer.

To check the remaining time of the sleep timer

Press SLEEP.

Downloaded from www.Manualslib.com manuals search engine

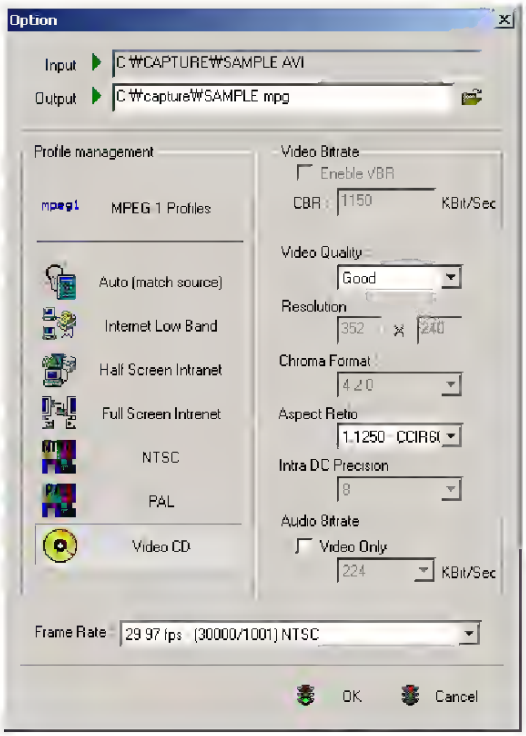

To add a multimedia file to be encoded, click on the + or **Add** button. This will open the Browse dialog box. Browse to the desired directory/file and click **Open**.

Once the multimedia file is added to the Batch Process Display Window, the Option Selection Dialog Box appears. Select to encode the file as Mpeg 1 or Mpeg 2. For more information, refer to the **Translation Option Dialog** Section 6.3.

The output file will be created in the same directory as the original file unless a different path is specified in the **Output** field. It will also maintain the original video file name and add a file extension matching the video format of the output type selected. The file name can also be changed manually.

Downloaded from www.Manualslib.com manuals search engine

Change slide show settings

1 While you view a slide show, press ☰ OPTIONS.
   ↳ The slide show options menu is displayed.

2 Select one of the following, then press OK.
   - **[Start/Stop slideshow]**: Start or stop slideshow.
   - **[Slideshow transitions]**: Set the transition from one picture to the next.
   - **[Slideshow frequency]**: Select the display time for each photo.
   - **[Repeat]** / **[Play once]**: View the pictures in the folder once only, or repeatedly.
   - **[Shuffle off]** / **[Shuffle on]**: View the pictures in sequential order, or at random.
   - **[Rotate image]**: Rotate photo.
   - **[Show info]**: Display the picture name, date, size and next picture in the slide show.
   - **[Set as Scenea]**: Set the selected picture as the TV wallpaper.

3 To return, press ⮌.

Note

- **[Rotate image]** and **[Show info]** appear only when the slideshow is paused.

Listen to music

1 In the USB browser, select **[Music]**, then press OK.

2 Select a music track or album, then press OK to play.

3 To control play, press the play buttons:
   - ▶ to play.
   - ❚❚ to pause.
   - ⏮ or ⏭ to play the previous or next track.
   - ◀◀ or ▶▶ to search forward or backward.
   - ■ to stop.

Change music settings

- While you play music, press ☰ OPTIONS to access one of the following settings, then press OK.
   - **[Stop playback]**: Stop music play.
   - **[Repeat]**: Play a song once or repeatedly.
   - **[Shuffle on]** / **[Shuffle off]**: Play songs in sequence or at random.
   - **[Show info]**: Display the file name.

View a slideshow with music

You can view a picture slide show with background music.

1 Select an album of songs.

2 Press OK.

3 Press ⮌ to return to the USB content browser.

4 Select an album of pictures.

5 Press OK.
   ↳ The slideshow begins.

6 To exit, press ⮌.

Disconnect a USB storage device

Caution

- Follow this procedure to avoid damage to your USB storage device.

1 Press ⮌ to exit the USB browser.

2 Wait for five seconds, then disconnect the USB storage device.

Downloaded from www.Manualslib.com manuals search engine

Table 1-2 Connector Functions

Connector	Function
CN12	Hard disk LED connector
CN13	SCSI disk LED connector (for M11E Combo Card)
CN15	Wake up On LAN connector
CN16	Power switch
CN19	Housing fan connector
CN20	Audio line-in connector (reserved*)
CN21	Modem Ring-In wake up connector
CN22	Turbo LED connector
JP1	Power LED connector
JP2	System reset connector
JP5	Housing intrusion switch connector

* Reserved items are items that are supported by the system board but not available in the current version.

Downloaded from www.Manualslib.com manuals search engine

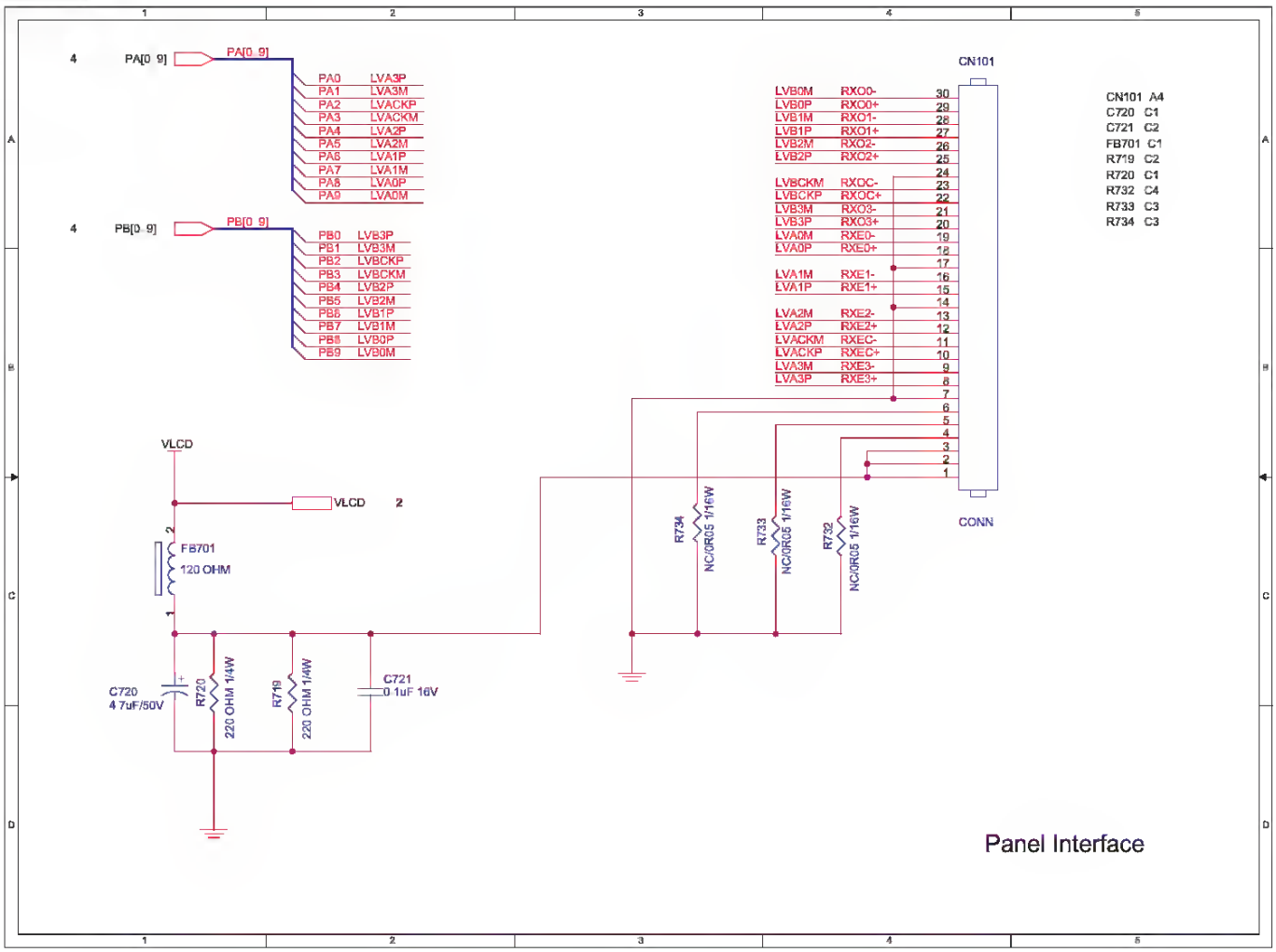

Downloaded from www.Manualslib.com manuals search engine

6. Screw off the screws and release the BTB connects on the MB.

Downloaded from www.Manualslib.com manuals search engine

© 2008 Koninklijke Philips Electronics N.V.
All rights reserved.
P41T9043813 1A

4.7.1 Configuring WEP encryption

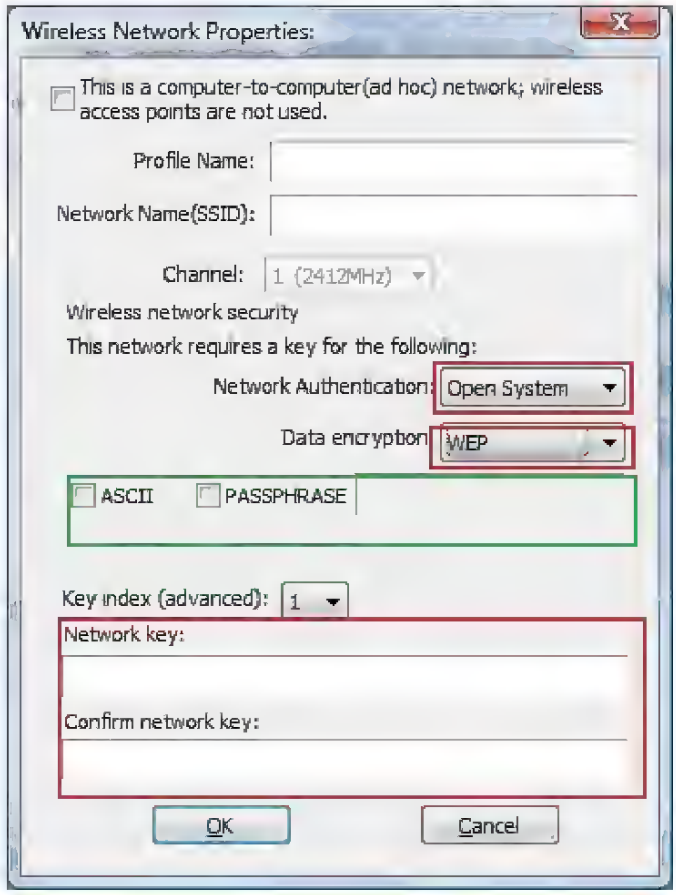

Select **WEP** from the **Data encryption** box.

Under **Network Authentication**, you will want to select **Shared key** or **Open System**, depending on the router settings.

Select the encryption setting according to the setting of the router.

- **ASCII** or **PASSPHRASE** will also be predetermined by the router. Refer to your routers settings to find out what you should select here.

or

- **Key Index** is the key on the router that is currently in use. Input the Network key that matches the Network key of the router.

Click **OK** to save your settings.

Downloaded from www.Manualslib.com manuals search engine

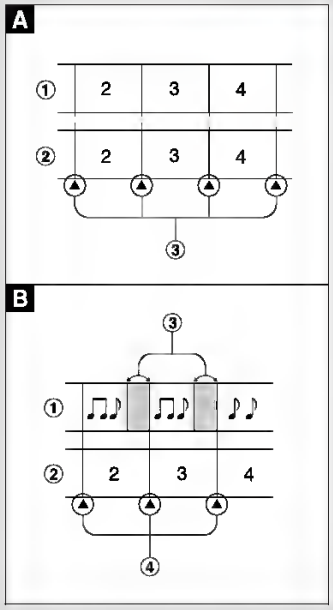

USABLE FUNCTIONS FOR RECORDING

English

Registering the index mark

- To search for a desired passage quickly, you can register up to 254 index marks.
- This unit has three functions for registering the index marks.

Auto marker function

"AUTO MARK" appears in the display and index mark information is registered automatically as follows.

During digital recording from a CD or MD → A

The index mark information recorded on the CD or MD is copied as it is.

① CD or MD
② Recording (MD)
③ Index marks

During analog recording or microphone recording → B

If there is an unrecorded section lasting longer than 3 seconds, an index mark will be registered automatically when a signal is input next time.

① Input sound
② Recording (MD)
③ While there is no sound
④ Index marks

Time marker function

"TIME MARK" appears in the display and index mark information is registered every 5 minutes.

BEARBEITEN

Deutsch

Kombinieren von zwei Spuren

Sie können zwei Spuren kombinieren, indem Sie die Indexmarkierung zwischen den Spuren loschen.
Beispiel: Die 2. und die 3. Spur können kombiniert werden, indem die Indexmarkierung am Anfang der 3. Spur gelöscht wird.

Bedienung bei Wiedergabe oder im Wiedergabepausebetrieb.

1 **Spielen Sie die zweite Hälfte der beiden Spuren, die kombiniert werden sollen.**
Beispiel: Zum Kombinieren der 2. Spur und der 3. Spur spielen Sie die 3. Spur ab.
2 **Schieben Sie REC/EDIT, während der rote Knopf gedrückt gehalten wird.**
3 **Drücken Sie MODE wiederholt, bis „COMBINE" erscheint.**
4 **Drücken Sie ENTER.**
Die Indexmarkierung der gewählten Spur wird gelöscht. Gleichzeitig bewegen sich alle nachfolgenden Spurnummern um eins nach unten.
5 **Drücken Sie ■.**
Die Daten über die Inhalte des Bearbeitungsvorgangs werden registriert, und die Anzeige verschwindet.

Abbrechen der Eingabe

Drücken Sie ►II oder ■.

Wenn Spuren betitelt sind

- Wenn beide Spuren betitelt sind, verbleibt der Titel der Spur mit der niedrigeren Nummer.
- Wenn nur eine Spur betitelt ist, verbleibt dieser Titel.

Hinweis

Sie können nicht eine in Mono und eine in Stereo aufgenommene Spur kombinieren.

EDITION

Français

Combinaison de deux pistes

Vous pouvez combiner deux pistes en effaçant la marque index entre elles
Exemple: Les pistes 2 et 3 peuvent être combinées en effaçant la marque index au début de la piste 3.

Opérez en mode de lecture ou pause de lecture.

1 **Lisez la seconde des deux pistes à combiner.**
Exemple: Lisez la piste 3 pour combiner les pistes 2 et 3.
2 **Faites glisser REC/EDIT en pressant le bouton rouge.**
3 **Appuyez plusieurs fois sur MODE jusqu'à ce que "COMBINE" s'affiche.**
4 **Appuyez sur ENTER.**
La marque index de la piste sélectionnée est supprimée. Simultanément, toutes les pistes suivantes sont avancées d'une unité.
5 **Appuyez sur ■.**
Les données concernant le processus d'édition sont consignées et l'affichage disparaît.

Pour annuler une entrée

Appuyez sur ►II ou ■.

Si les pistes ont un titre

- Si les deux pistes ont un titre, le titre de la piste de plus petit numéro est maintenu.
- Si une seule des deux pistes a un titre, ce titre est maintenu.

Remarque

Il est impossible de combiner une piste enregistrée en monaural et une piste enregistrée en stéréo.

AM-F75 AEZ EGF Bklet 30
28/4/2000, 6:06 PM

PANNEAU AVANT

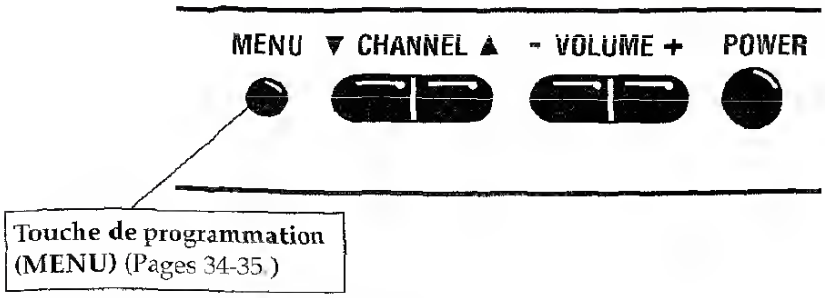

Touche de programmation (MENU) (Pages 34-35.)

PANNEAU ARRIÈRE

Prises d'entrée audio et vidéo
Raccordez ici un appareil vidéo externe.

Prise d'antenne/de câble (UHF/VHF/CATV)

Prises de sortie audio
Raccordez ici un appareil audio externe.

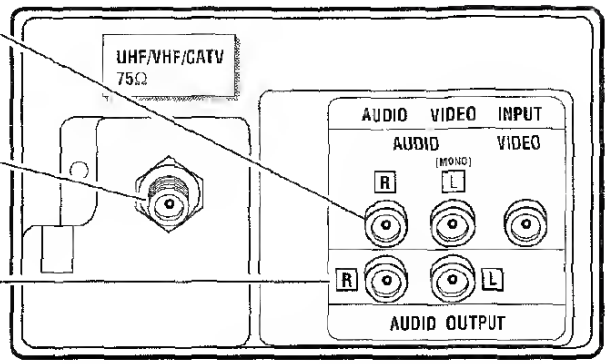

TÉLÉCOMMANDE UNIVERSELLE

Fait fonctionner le téléviseur, magnétoscope ou câbloconvertisseur. Pour les touches de fonction de la télécommande, voyez la page 32. Pour la programmation de la télécommande, voyez la page 33.

Insertion des piles (2 AA)

- Faites correspondre les polarités ⊕ et ⊖ à l'intérieur de la télécommande.
- Ne mélangez **pas** de vieilles piles avec des neuves; ne mélangez pas non plus différents types de piles.
- Retirez les piles de la télécommande si vous prévoyez ne pas l'utiliser pendant un mois ou plus. Des piles faibles peuvent fuir et endommager la télécommande. (La durée normale d'une pile est d'environ six mois.)

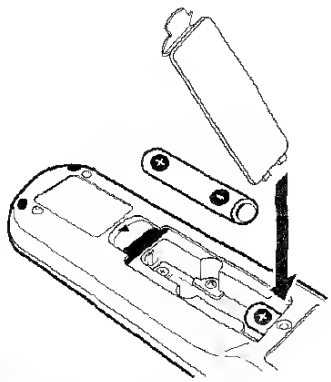

REMARQUE IMPORTANTE : Des piles usagées ou déchargées doivent être éliminées d'une manière qui est conforme aux lois applicables. Pour plus de détails, veuillez joindre les autorités locales en matière d'élimination des déchets solides.

Downloaded from www.Manualslib.com manuals search engine

More Detail

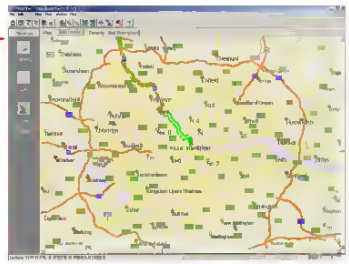

More Detail button or ***Detail > Show More*** in the **Map** menu

Click once to increase the level of detail you see on the map by one increment without changing the zoom level

Less Detail

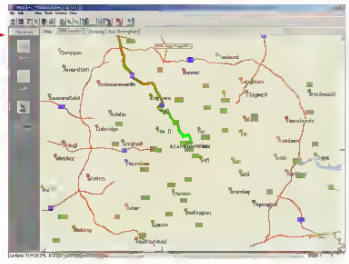

Less Detail button or ***Detail > Show Less*** in the **Map** menu

Click once to decrease the level of detail you see on the map by one increment without changing the zoom level

Zoom To Region

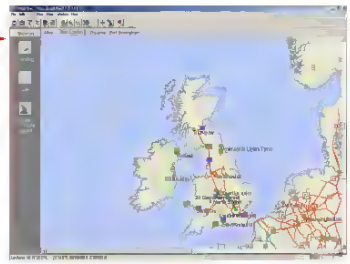

Zoom to Region button or **Zoom Region** in the **Map** menu This function allows you to zoom your map view to a specific area. Choices in the sub-menu will depend on which CoPilot data region(s) were purchased

Refresh Map

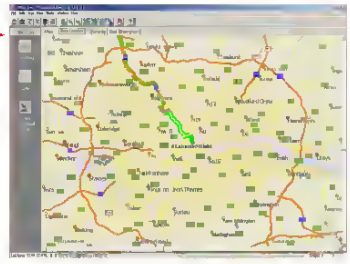

Refresh Map button or ***Refresh Map*** in the **Map** menu. When scrolling through a map you may notice it takes a few seconds for all the data to catch up. This function will snap the entire screen to a new map.

Downloaded from www.Manualslib.com manuals search engine

Figure 1-9 shows a diagram of a Single Host, Single Adapter, with one Active Controller.

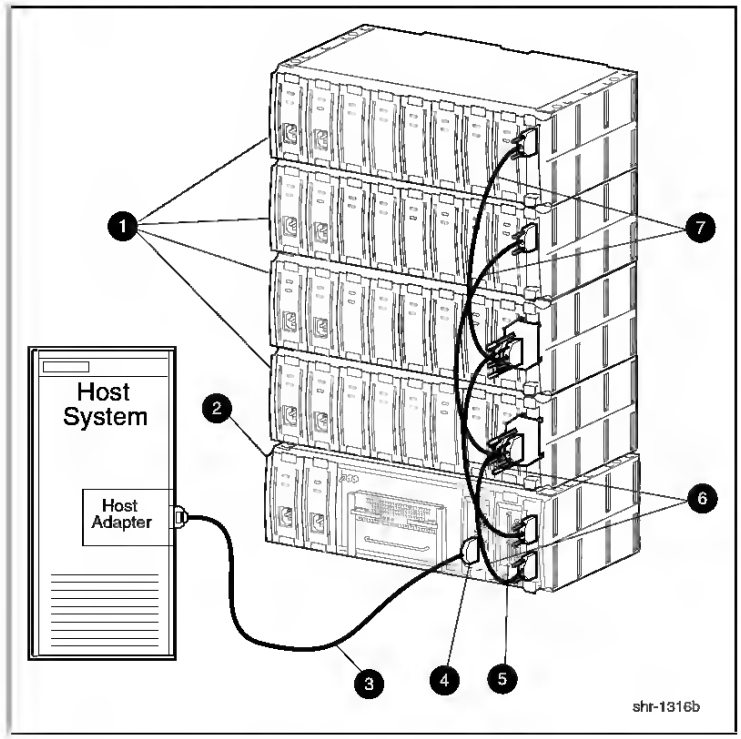

Figure 1-9. Single host, single adapter, with one active controller

Table 1-2
Single Host, Single Adapter, with One Active Controller

Item #	Description
❶	Device expansion shelves
❷	Controller shelf
❸	SCSI cable BN37A-05 (host adapter connection made using technology adapter cable BN38E-0B, not shown)
❹	Host-In connector on H0 I/O module
❺	Host-In connector to H1 I/O module (not used in this configuration)
❻	SCSI cables BN37A-0E (2) for device I/O module 0
❼	SCSI cables BN37A-0E (2) for device I/O module 1

Downloaded from www.Manualslib.com manuals search engine

Troubleshooting Tips

Please make these simple checks before calling for service. These tips can save you time and money since charges for TV installation and adjustment of customer controls are not covered under your warranty.

CAUTION: A video source (such as a video game, Compact Disc Interactive - CDI, or TV information channel) which shows a constant non-moving pattern on the TV screen, can cause picture tube damage. When your TV is continuously used with such a source the pattern of the non-moving portion of the game could leave an image permanently on the picture tube. When not in use, turn the video source OFF. Regularly alternate the use of such video sources with normal TV viewing.

No Power

- Check the TV power cord. Unplug the TV, wait 10 seconds, then reinsert plug into outlet and push POWER button again.
- Check that outlet is not on a wall switch. Be sure fuse is not blown on AC Power strip.

No Picture

- Check antenna connections. Are they properly secured to the TV's 75Ω plug?
- Check the TUNER MODE control for CABLE or ANTENNA setting.
- Check Audio/Video Input jack connections if using a VCR or other external device.

No Sound

- Check the VOLUME buttons.
- Check the MUTE button on the remote control.
- Check Audio/Video Input jack connections if using a VCR or other external device.

Unusual Screen Coloring

- Turn the TV OFF for several seconds, then power the set back ON.
- Unplug the TV for FIVE minutes. Plug the TV back into the AC outlet and power the TV ON. This should correct the problem.
- Check the Picture menu options for proper control settings.
- Pressthe Auto Picture button on the remote to change the color options. If the color resets itself, readjust the Picture menu option control.

Remote Does Not Work

- Check batteries. Replace with AA Heavy Duty (Zinc Chloride) or Alkaline batteries if necessary.
- Clean the remote and the remote sensor window on the TV.
- Check the TV power cord. Unplug the TV, wait 10 seconds, then reinsert plug into outlet and push POWER button again. Be sure fuse is not blown on AC Power strip.
- Check to be sure TV outlet is not on a wall switch.

TV Displays Wrong Channel or No Channels Above 13

- Repeat channel selection.
- Add desired channel numbers (CHANNEL control) into TV memory.
- Check to be sure the TUNER MODE control is set to the CABLE option.

Cleaning and Care

- To avoid possible shock hazard be sure the TV is unplugged from the electrical outlet before cleaning.
- When cleaning the TV screen take care not to scratch or damage the screen surface (avoid wearing jewelry or using anything abrasive). Wipe the front screen with a clean cloth dampened with water. Use even, easy, vertical strokes when cleaning.
- Gently wipe the cabinet surfaces with a clean cloth or sponge dampened in a solution of cool clear water. Use a clean dry cloth to dry the wiped surfaces.
- Never use thinners, insecticide sprays, or other chemicals on or near the cabinet, as they might cause permanent marring of the cabinet finish.

Downloaded from www.Manualslib.com manuals search engine

AEG Hausgeräte GmbH
Postfach 1036
D-90327 Nürnberg

http://www.aeg.hausgeraete.de

© Copyright by AEG

en es

152985 45/2

Downloaded from www.Manualslib.com manuals search engine

D-SUB CONNECTORS

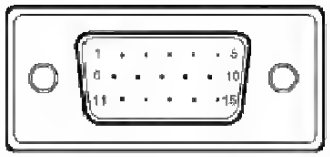

15-Pin Color Display Signal Cable

PIN NO	DESCRIPTION	PIN NO	DESCRIPTION
1.	Red	9	+5V
2.	Green	10.	Logic Ground
3.	Blue	11.	Monitor Ground
4.	Monitor Ground	12.	DDC-Serial Data
5	DDC-return	13	H-Sync
6	R Ground	14	V Sync
7	G-Ground	15	DDC Serial Clock
8.	B-Ground		

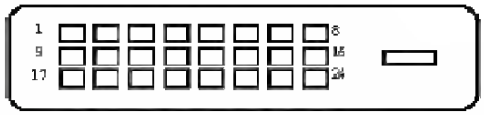

24-Pin Color Display Signal Cable

PIN	Meaning	PIN	Meaning
1	TMDS Data2-	13	TMDS Data3+
2	TMDS Data2+	14	+5V Power
3	TMDS Data 2/4 Shield	15	GND(return for +5V hsync vsync)
4	TMDS Data4-	16	Hot Plug Detect
5	TMDS Data4+	17	TMDS Data0-
6	DDC Clock	18.	TMDS Data0+
7	DDC Data	19	TMDS Data 0/5 Shield
8	Analogue Vertical Sync	20	TMDS Data5-
9	TMDS Data1-	21	TMDS Data5+
10	TMDS Data1+	22	TMDS Clock Shield
11	TMDS Data 1/3 Shield	23	TMDS Clock+
12	TMDS Data3-	24	DDC TMDS Clock-

Downloaded from www.Manualslib.com manuals search engine

Data Usage

The Data Usage section shows how much data has been transmitted to your tablet, either in total or for each app. This information is useful if you are using a metered service.

More...

Putting your tablet in Airplane mode

You can enter Airplane mode (also known as flight mode) to turn off network and Bluetooth functions and use your tablet during a flight. Check with your airline to make sure this is permitted onboard.

Switch your tablet off during takeoff and landing as it may interfere with aircraft electronic systems.

Note

When Airplane mode is active, the ✈ icon is displayed in the status area.

To turn Airplane mode on or off, tap **Settings**, then under **Wireless & Networks** tap **More** > **Airplane mode**.

Alternatively, swipe down twice from the top of the screen to toggle airplane mode on or off.

Virtual Private Network (VPN)

This option enables you to connect to a private network, such as a secure work or office environment.

Add a VPN by tapping **Settings**, then under **Wireless & Networks** tap **More** > **VPN**. In the top-right corner of the screen, tap the plus sign.

You need to set a lock screen PIN or password before you can use credential storage.

Device

Sound & notification

Adjust the volume of your tablet using the volume buttons on the side of the tablet.

Downloaded from www.Manualslib.com manuals search engine

5.5 DSL Configuration

DSL Configuration

From Configuration, double-click on the *DSL Configuration* icon. To create a new ATM PVC interface, select the appropriate *DSL line mode* and double-click on the *Make New ATM PVC* icon.

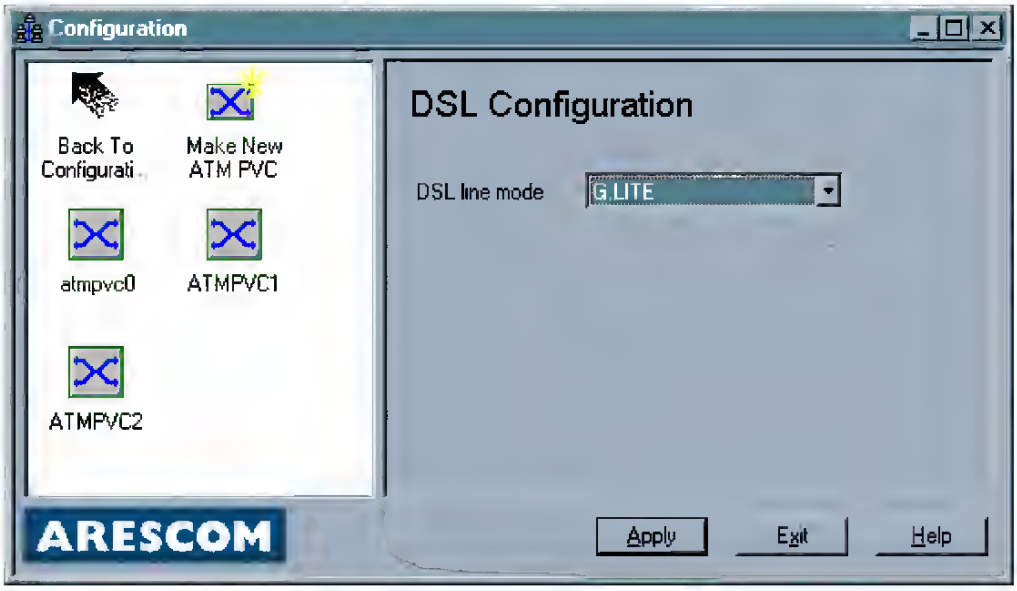

Figure 5.5 DSL Configuration

You have the option to use *ANSI T1.413, G.Lite, G.DMT,* or *Multi Mode* as your *DSL line mode*. To find out which *DSL line mode* works better with your unit, please consult your ISP or telephone company.

When you are done, click *Apply* to go to the next window.

Note: The DSL line mode refers to the entire NetDSL unit and not each individual ATM PVC profile. Once you have made your choice, all subsequent ATM PVC profiles created will be using the same line mode.

Downloaded from www.Manualslib.com manuals search engine

USING THE CAMERA AND CAMCORDER

Your tablet features a front- and rear-facing camera. This section will take you through all the steps in taking photos and videos with your tablet.

Note

It is recommended that you insert a microSD card into the microSD slot before using the camera.

You can only save photos and videos to internal memory or a microSD card, not an external USB storage device.

To activate the camera or camcorder, open the *Application* menu and tap **Camera**.

Camera/camcorder icons and indicators

In the camera window, swipe down on the screen to adjust the camera's Quick settings. Tap the *Camera settings* icon on the left to adjust the Camera settings.

Downloaded from www.Manualslib.com manuals search engine

English

Using the inner connector(s)

Turn the projector off by pressing (POWER). Allow the projector at least 45 minutes to cool down. Disconnect the power cord.

1 Turn the projector upside down to locate the inner connector cover. (Illustration #1)

2 Use a screwdriver to remove the screw(s) from the cover. (Illustration #2)

3 Push up and remove the cover. (Illustration #3)

4 Locate the HDMI (MHL) connector beside the focus/zoom ring.

5 Insert the WirelessHD dongle (MWIHD1) or other HDMI/MHL dongle into the HDMI (MHL) connector. (Illustration #4)

6 A micro USB cable is also available if you need to power the HDMI/MHL dongle.

7 Replace the cover and tighten the screw(s). (Illustration #5 - #6)

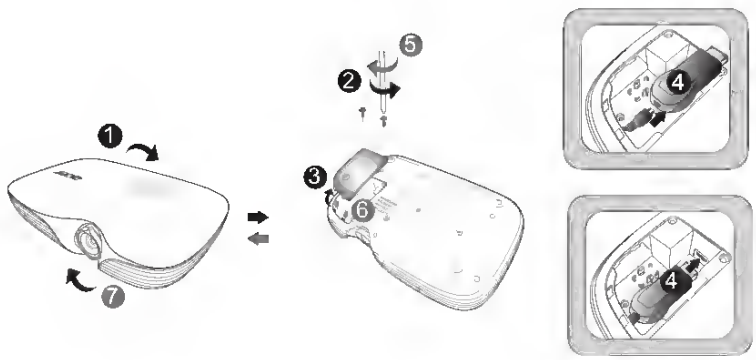

Downloaded from www.Manualslib.com manuals search engine

Defrosting

To defrost, use the defrost oven function without setting a temperature.

Dishes for defrosting

- Remove packaging and place the food on a plate on the shelf.
- Do not use a plate or dish to cover as these significantly increase the defrosting time.

Shelf positions

- Insert the shelf in the **1st position from the bottom** to defrost.

Notes on the defrosting table

The table below offers some guidance on defrosting times.

Defrosting table

Dish	Defrosting time Mins.	Final defrosting time Mins.	Note
Chicken, 1000 g	100-140	20-30	Place the chicken on an upside-down saucer on a large plate. Halfway through cooking turn or cover with foil.
Meat, 1000 g	100-140	20-30	Halfway through cooking turn or cover with foil.
Meat, 500 g	90-120	20-30	Halfway through cooking turn or cover with foil.
Trout, 150 g	25-35	10-15	Do not cover
Strawberries, 300 g	30-40	10-20	Do not cover
Butter, 250 g	30-40	10-15	Do not cover
Cream, 2 x 200 g	80-100	10-15	Do not cover (Cream may be whipped when some of it is still slightly frozen)
Flan, 1400 g	60	60	Do not cover

Downloaded from www.Manualslib.com manuals search engine

SELECTION D'UNE SOURCE AUDIO OU VIDEO

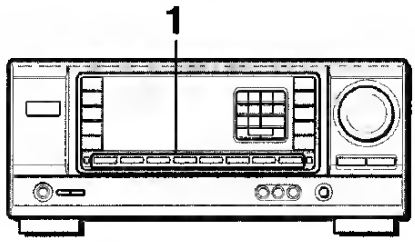

1 Sélectionnez la source de programme.
Appuyez sur une des touches FUNCTION ou la touche TAPE MONITOR.

Pour écouter ou regarder	Appuyez sur la touche
une cassette	TAPE MONITOR
la radio	TUNER
un disque analogique	PHONO
la télévision, etc.	AUX/TV[a]
un disque compact	CD
une vidéo (magnétoscope ou LD)	VIDEO 1, VIDEO 2[a], VIDEO 3
MD	VIDEO 2[a]

[a]: Pour sélectionner AUX/TV, ou VIDEO 2/LD/MD, voir "Pour changer le nom affiché pour la touche AUX/TV et la touche VIDEO 2 dans "AVANT DE COMMENCER" (voir page 6).

REMARQUE

Quand vous utilisez un tourne-disque avec amplificateur égaliseur intégré, réglez l'interrupteur de l'emplificateur égaliseur sur erràt. Reportez-vous au mode d'emploi de la platine tourne-disque pour les détails.

2 Démarrez la source de programme sélectionnée.

3 Réglez le son.

A propos de la source vidéo fournie au moniteur ou téléviseur

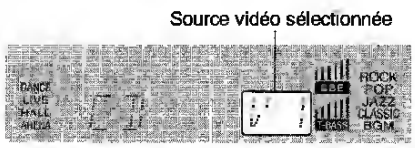

V1: VIDEO 1, V2: VIDEO 2, V3: VIDEO 3

La source vidéo sélectionnée est indiquée sur l'afficheur et le signal vidéo transmis par la prise MONITOR VIDEO OUT apparaît sur le téléviseur.

ENREGISTREMENT D'UNE SOURCE AUDIO

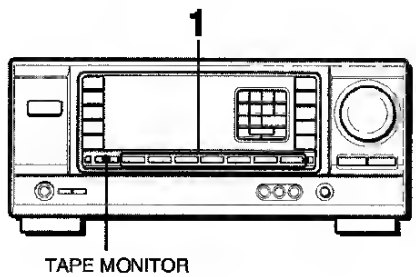

1 Sélectionnez la source de programme qui doit être enregistrée.
Appuyez sur une des touches FUNCTION.

2 Mettez la platine à cassette ou l'enregistreur MD en mode d'enregistrement.

3 Démarrez la source de programme sélectionnée.

Pour contrôler le son enregistré pendant l'enregistrement (quand la platine à cassette raccordée a trois têtes)
Appuyez sur la touche TAPE MONITOR. "TAPE ON" apparaît sur l'afficheur pendant quatre secondes, puis le nom de la source sélectionnée à l'étape 1 réapparaît. Pour cesser de contrôler le son, appuyez une nouvelle fois sur la touche pour que "TAPE oFF" apparaisse.

REMARQUE

Le son contrôlé avec le système BBE n'e eucun effet sur l'enregistrement (voir page 7).

Downloaded from www.Manualslib.com manuals search engine

Ceiling Mount Installation

If you wish to install the projector using a ceiling mount, please refer to the steps below:

1 Drill four holes into a solid, structurally sound part of the ceiling, and secure the mount base.

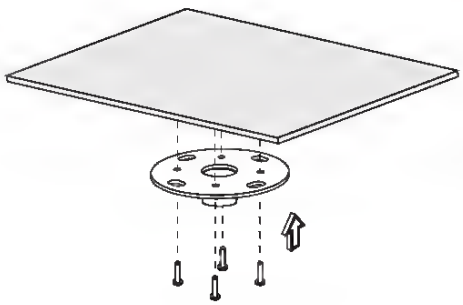

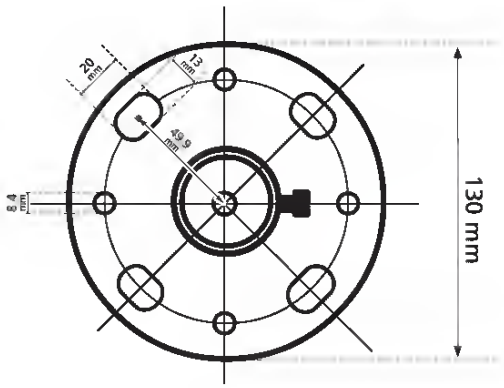

Note: Screws are not included. Please obtain the appropriate screws for your type of ceiling.

2 Secure the ceiling rod using the appropriate type of four-cylinder screws.

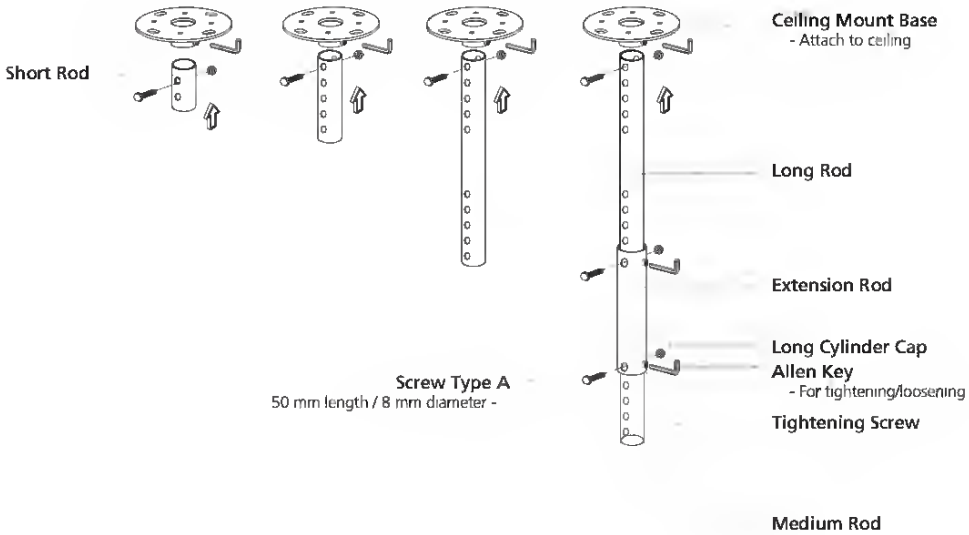

Downloaded From projector-manual.com Acer Manuals

Downloaded from www.Manualslib.com manuals search engine

AJUSTE DEL TEMPORIZADOR

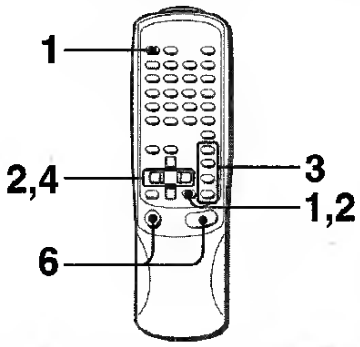

La unidad podrá encenderse a la hora especificada todos los días gracias al temporizador incorporado.

Preparación
Asegúrese de que la hora del reloj sea correcta. (Consulte la página 5.)

Utilice el control remoto.

1 **Pulse una vez el botón TIMER del control remoto para visualizar ⏲, y pulse el botón ❚❚ SET antes de que pasen 4 segundos.**
⏲ se visualizará y la hora perpedeerá.

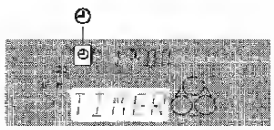

NOTA
Si no pulsa el botón ❚❚ SET antes de que pasen 4 segundos tal vez empiece otra operación.

2 **Designe la hora de encendido del temporizador pulsando el botón ⏮ DOWN o ⏭ UP y luego pulse el botón ❚❚ SET. Repita el mismo procedimiento para designar el minuto de encendido del temporizador.**

Después de designar la hora de encendido del temporizador, TIMER y uno de los nombres de las fuentes de sonido parpadearán alternativamente durante 4 segundos en el visualizador.

3 **Antes de que pasen 4 segundos, pulse uno de los botones de función para seleccionar una fuente de sonido.**
"TIMER" y el nombre de la fuente de sonido seleccionada perpadeerán alternativamente durante 4 segundos. En este momento, el botón de función seleccionado no se encenderé.
- Si este paso no se completa antes de que pasen 4 segundos, repita desde el peso 1.
- Si se pulsa el botón TUNER, la bende no se podrá seleccionar en este paso.

4 **Antes de que pasen 4 segundos, seleccione la duración del periodo de reproducción activado por temporizador con el botón ⏮ DOWN o ⏭ UP.**

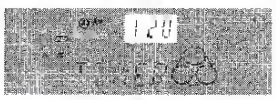

La duración del periodo de reproducción activado por temporizador podrá ajustarse entre 10 y 240 minutos en pasos de 10 minutos.
- Si este paso no se completa antes de que pasen 4 segundos, repite desde el peso 1.

5 **Prepare la fuente de sonido.**
Pera escuchar un disco compacto, introduzce el disco que vaya a reproducir en primer luger en le bendeje 1.
Pare escuchar une cinta, introduzca la cinta en la platina 1 o en la 2.
Pera escuchar la radio, sintonice une emisora.

6 **Pulse el botón POWER para apagar la unidad después de haber ajustado el volumen y el tono.**
⏲ permaneceré en el visualizador después de que se desconecte la alimentación (modo de espera del temporizador).

Cuando llegue la hora de encendido del temporizador, la unidad se encenderá y la reproducción empezará con la fuente de sonido seleccionada.

Para comprobar la fuente de aonido y el tiempo especificados
Pulse el botón TIMER del control remoto. La hora de encendido del temporizador y la fuente de sonido seleccionada se visualizarán durante 4 segundos. Sin embargo, la duración del periodo de reproducción activada por temporizador no se visualizará.

GRABACION CON TEMPORIZADOR

La grabación con temporizador sólo podrá utilizarse con les fuentes de sonido TUNER y VIDEO/AUX (con un temporizador externo).

Pulse dos veces el botón TIMER del control remoto para que ⏲ REC eparezca en el visuelizador, y pulse el botón ❚❚ SET antes de que pasen 4 segundos. Repite los pesos mostrados arriba, a partir del paso 2, e inserte la cinta que vaya a grabar en la platina 2 después de efectuar el paso 5.

Para cancelar temporalmente el modo de espera del temporizador
Pulse el botón TIMER del control remoto para que ⏲ o ⏲ REC desaparezcan del visuelizador.
Para reponer el modo de espera del temporizador, pulse de nuevo el botón para visualizer ⏲ o ⏲ REC.

Utilización de la unided mientras esté ajustado el temporizador
Podré utilizar normalmente la unidad después de ajustar el temporizador.
Antes de desconecter le alimenteción, repíta el paso 5 para preperar la fuente de sonido y ajuste el volumen y el tono.

NOTA
- La reproducción y la grabación con temporizador no empezarán si no se desconecta la alimentación.
- El equipo conectado no se podrá encender ni apagar con el temporizador incorporado de esta unidad. Utilice en este caso un temporizador externo.

Downloaded from www.Manuatstib.com manuals search engine

26 Toiminnot

26.1 Ajastin

Voit halutessasi antaa nimen TV-kanavalle. Ajastintoiminnolla voit asettaa TV:n vaihtamaan määrättyyn aikaan toiselle kanavalle katsellessasi toista kanavaa. Voit käyttää sitä myös halyttimena, joka kytkee määrättyyn aikaan TV:n päälle valmiustilasta. Jotta ajastin toimisi, vastaanotinta ei saa kytkeä pois päältä. Jos vastaanotin on kytketty pois päältä, ajastin ei toimi.

1 Paina MENU (TV) -näppäintä.

2 Valitse **Toiminnot** painamalla toistuvasti nuolinäppäimiä ▲ ▼ ja siirry **Toiminnot**-valikkoon painamalla näppäintä ▶/ (OK).

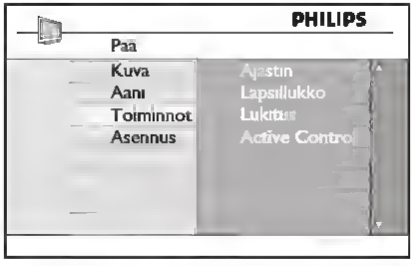

3 Siirry valikkoon painamalla ▶/ (OK)-näppäintä.

4 Valitse kohta painamalla nuolinäppäimiä ▲ ▼.

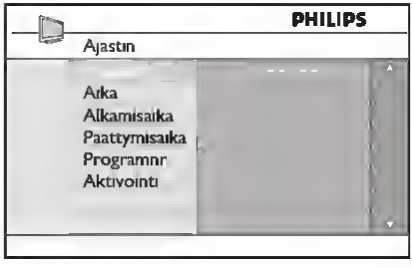

5 Voit tehdä säätöjä ajastinasetuksiin nuolinäppäimillä ◀, ▶, ▲, ▼ tai **Digit 0-9** -numeronäppäimillä.

Uniajastin: Kun aktivoit toiminnon, vastaanotin kytkeytyy valmiustilaan tietyn (ohjelmoidun) ajan kuluttua.
Poista toiminnon aktivointi valitsemalla **Off** (Ei)-vaihtoehto.

Huomaa

Uniajastimen asetuksen viimeisen minuutin aikana näyttöön tulee laskenta. Voit perua uniajastintoiminnon painamalla mitä tahansa kaukosäätimen painiketta.

Aika: anna nykyinen aika.

Alkamisaika: anna aloitusaika.

Päättymisaika: anna valmiusaika.

Ohjelmanumero (Programnr.): anna kanavan numero, jolla heratyshälytys annetaan.

Aktivointi: asetuksiin sisältyy:
– **Kerran** yksittäiselle hälytykselle
– **Joka Päivä** päivittäin tapahtuvalle hälytykselle
– **Katk.** hälytyksen peruuttamiseen

6 Aseta TV-vastaanotin valmiustilaan painamalla ohjauspaneelin ⏻ -näppäintä. TV käynnistyy automaattisesti ohjelmoituun aikaan. Jos jätät TV-vastaanottimen päälle, se vain vaihtaa kanavaa aloitusaikana ja menee valmiustilaan lopetusaikana.

English

Compatibility modes

A. VGA Analog

1 VGA Analog - PC Signal

Modes	Resolution	V.Frequency [Hz]	H.Frequency [KHz]
VGA	640x480	60	31.5
	640x480	72	37.9
	640x480	75	37.5
	640x480	85	43.3
	640x480	120	61.9
SVGA	800x600	56	35.1
	800x600	60	37.9
	800x600	72	48.1
	800x600	75	46.9
	800x600	85	53.7
	800x600	120	77.4
XGA	1024x768	60	48.4
	1024x768	70	56.5
	1024x768	75	60.0
	1024x768	85	68.7
	1024x768	120	99.0
SXGA	1152x864	70	63.8
	1152x864	75	67.5
	1152x864	85	77.1
	1280x1024	60	64.0
	1280x1024	72	77.0
	1280x1024	75	80.0
QuadVGA	1280x960	60	60.0
	1280x960	75	75.2
SXGA+	1400x1050	60	65.3
PowerBook G4	640x480	60	31.4
PowerBook G4	640x480	66.6 (67)	34.9
PowerBook G4	800x600	60	37.9
PowerBook G4	1024x768	60	48.4
PowerBook G4	1152x870	75	68.7
PowerBook G4	1280x960	75	75.0
i Mac DV (G3)	1024x768	75	60.0

Downloaded From projector-manual.com Acer Manuals

Downloaded from www.Manualslib.com manuals search engine

Table 3-3
Memory Test Error Codes

Error Code	Description	Recommended Action
200-xx	Invalid memory configuration	Reinsert memory modules in correct location and re-test.
201-xx 202-xx	Memory machine ID test failed Memory system ROM checksum failed	The following steps apply to error codes 201-xx and 202-xx: 1. Replace the system ROM and re-test. 2. Replace the processor board and re-test. 3. Replace the memory expansion board and re-test.
203-xx 204-xx 205-xx 206-xx 210-xx	Memory write/read test failed Memory address test failed Walking I/O test failed Increment pattern test failed Random pattern test failed	The following steps apply to error codes 203-xx through 210-xx: 1. Replace the memory module and re-test. 2. Replace the processor board and re-test. 3. Replace the memory expansion board and re-test.

Table 3-4
Keyboard Test Error Codes

Error Code	Description	Recommended Action
301-xx 302-xx 303-xx 304-xx	Keyboard short test, 8042 self-test failed Keyboard long test failed Keyboard LED test, 8042 self-test failed Keyboard typematic test failed	The following steps apply to error codes 301-xx through 304-xx: 1. Check the keyboard connection. If disconnected, turn off the computer and connect the keyboard and re-test. 2. Replace the keyboard and re-test. 3. Replace the system board and re-test.

Downloaded from www.Manualslib.com manuals search engine

Downloaded from www.Manualslib.com manuals search engine

TABLE DES MATIERES

ORGANES ET COMMANDES 3
RETRAIT ET FIXATION DU PANNEAU AVANT 4
REGLAGE DE L'HEURE 5
FONCTIONNEMENT DE LA RADIO 5
PREREGLAGE DE STATIONS 6
FONCTION MES INFORMATIONS 8
LECTURE DE CD 10
LECTURE MP3 11
AJUSTEMENTS DU SON 14
LECTURE DU CHANGEUR DE CD 16
RACCORDEMENT D'UN LECTEUR DE CASSETTE/MD/MP3 PORTABLE OU D'UN AUTRE EQUIPEMENT 17
REGLAGE DE LA TONALITE BIP 17
REGLAGE DE LA COMMANDE DE CONTRASTE 17
TELECOMMANDE MONTEE SUR LE VOLANT 18
DEPANNAGE 22
ENTRETIEN 22
SPECIFICATIONS ..... Cuverture dos

Mode DEMO (démonstration)

Cet appareil est doté d'un mode d'affichage (mode DEMO) spécial qui fait une démonstration des modes d'exploitation de l'appareil. Il commute automatiquement au mode DEMO s'il est mis sous tension et laissé tel quel 5 secondes après la fin de toutes les connexions.

Pour annuler le mode DEMO

En mode DEMO, presser et maintenir enfoncé DISP plus de 2 secondes.
Pour revenir en mode DEMO, presser et maintenir enfoncé une seconde fois DISP plus de 2 secondes.

Avant le fonctionnement

Les disques portant le logo à droite sont lisibles sur cet appareil.

COMPACT disc DIGITAL AUDIO

Cet appareil peut aussi lire des CD-R ou CD-RW contenant des morceaux audio ou des fichiers MP3.

Remarques

- Selon l'état de l'équipement d'enregistrement ou du disque CD-R/RW lui-même, certains CD-R/RW sont illisibles sur cet appareil.
- L'appareil ne peut pas lire des disques CD-R/RW ne contenant pas de données ou des données formatées de type différent de MP3.

Voir la page 11 pour les détails sur MP3.

Downloaded from www.Manualslib.com manuals search engine

9.4.8 Diagram A5, TDA1771 (IC I600)

Block Diagram

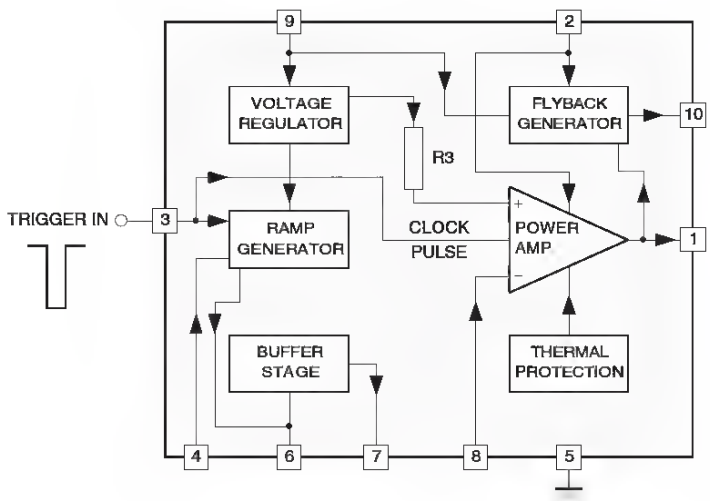

Pin Configuration / Connection Diagrams

Downloaded from www.Manualslib.com manuals search engine

Expanding through options

Your notebook PC offers you a complete mobile computing experience.

Connectivity options

Ports allow you to connect peripheral devices to your computer as you would with a desktop PC. For instructions on how to connect different external devices to the computer, read the following section.

Fax/data modem

Your computer has a built-in V.92 56 Kbps fax/data modem.

Warning! This modem port is not compatible with digital phone lines. Plugging this modem into a digital phone line will damage the modem.

To use the fax/data modem port, connect a phone cable from the modem port to a telephone jack.

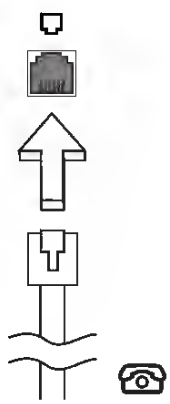

Warning: Please make sure that the cable you use is appropriate for the country in which you are working.

Downloaded from www.Manualslib.com manuals search engine

DRY-FIRE

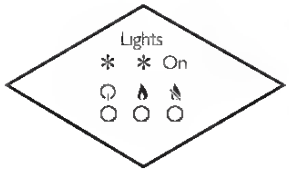

Is the system full of water ?

NO

Fill system with water and bleed out all air.

YES

Is the pump running ?

NO

Pump or Pump Wiring fault.

YES

Unplug 5-way PCB connector. Is there continuity between H

YES

Replace PCB.

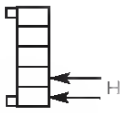

Viewed from Wire Entry end

NO

Disconnect Flow Switch Inline connector. With pump running is there continuity across flow switch ?

YES

Wires from inline connector to PCB faulty.

NO

Remove flow switch from boiler. Is there a physical blockage to the paddle within the flow switch ?

NO

Is there a blockage in the system ?

NO

Replace Flow Switch

YES

Remove Blockage

YES

Remove Blockage.

 © Baxi Heating UK Limited 2010

Downloaded from www.Manualslib.com manuals search engine

All manuals and user guides at all-guides.com

TSU56AK

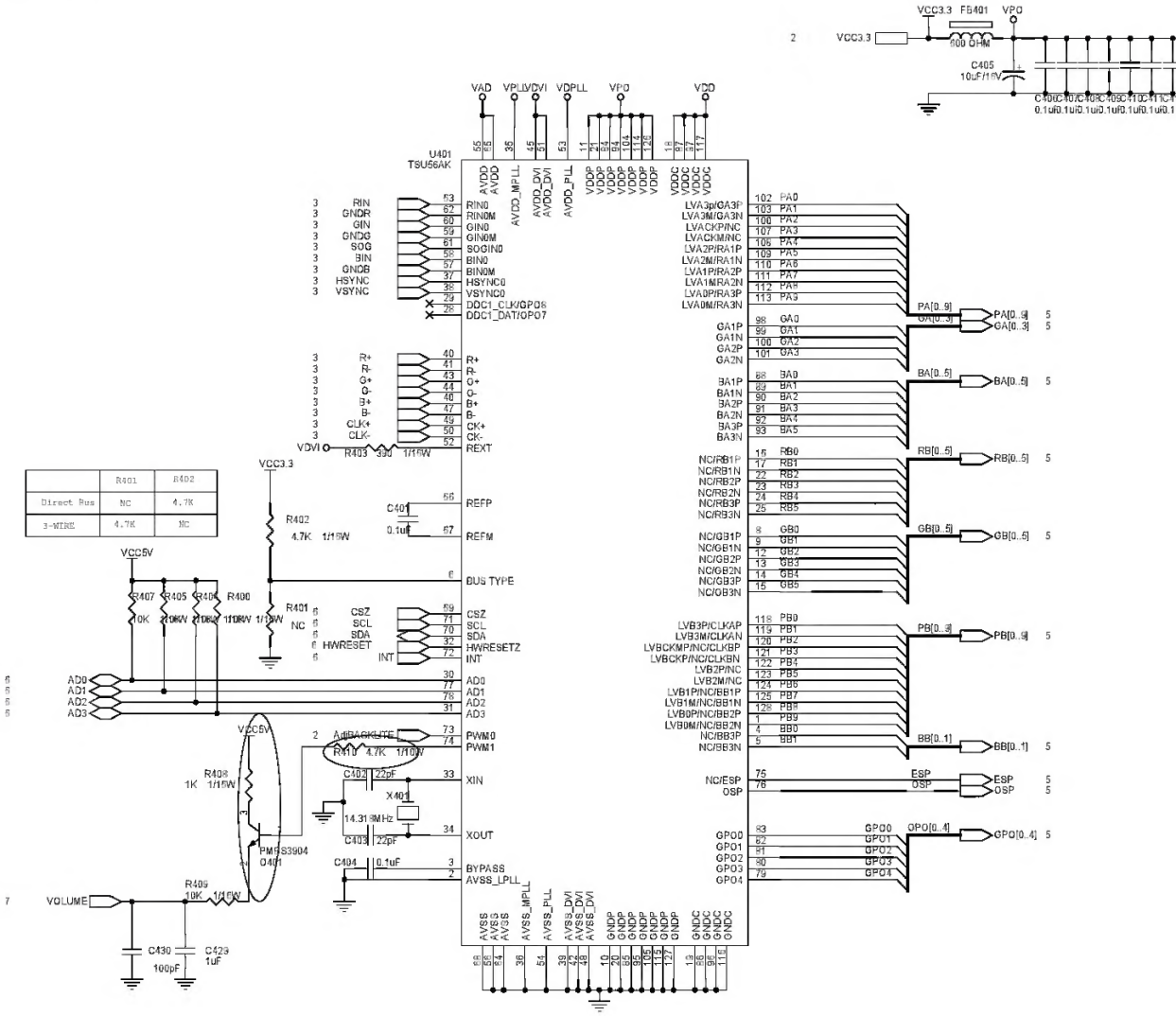

Appendix C. Updating TA 544 Firmware using TFTP

TA 544 supports firmware updates via the IP network using TFTP from a network server. The network server must be capable of supporting TFTP server requests from the TFTP client within the TA 544.

You must have a level 2 password to perform updates to the TA 544. Please consult the TA 544 administrator if this password is not known.

You must obtain the appropriate update file from ADTRAN Technical Support at **(888) 4ADTRAN (423-8726)** or call **(256) 963-8000** and ask for Technical Support.

You must copy the update file provided by ADTRAN to a network server that supports TFTP server requests. Record both the IP address of the server and the full path location of the update file to be downloaded.

The following materials are required:

- A PC with a Telnet client software
- A TFTP Server accessible on the local network (a TFTP Server is provided as part of the ADTRAN Utilities software)

© 2001, ADTRAN, Inc.

Downloaded from www.Manualslib.com manuals search engine

SSB: MUX and DEMUX

B09 MUX and DEMUX

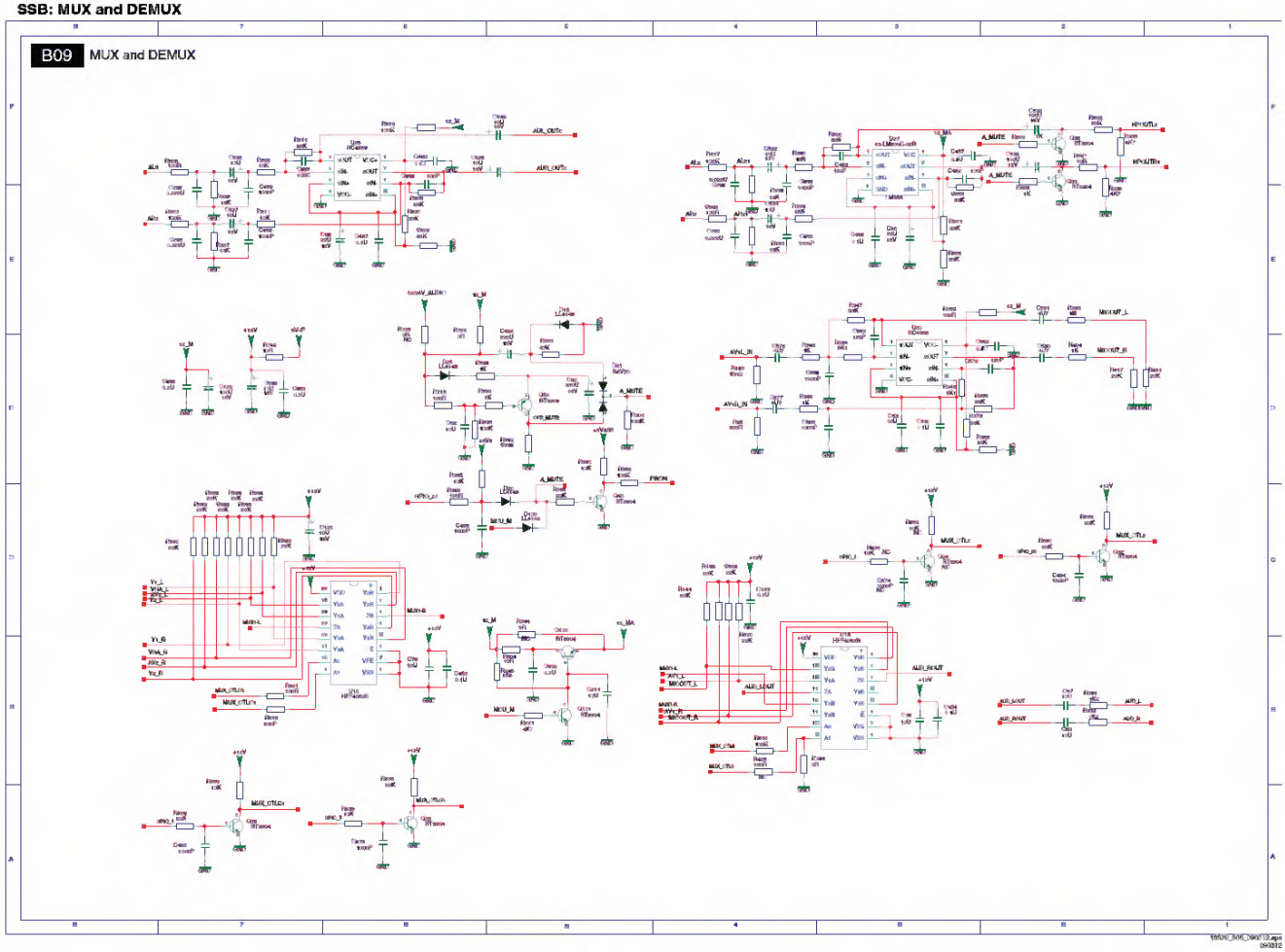

2009-Jun-05

Downloaded from www.Manualslib.com manuals search engine

Virtual Terminal Control

The Virtual Terminal Control screen (**Figure 47**) is available on all modules except the Total Access 3000 H2TU-C. It allows control of remote unit provisioning from an H2TU-C module. Select the Log into H2TU-R option from this screen, and press ENTER to begin a user-initiated session with the remote unit. When the remote session is completed, press CTRL+X to terminate the session.

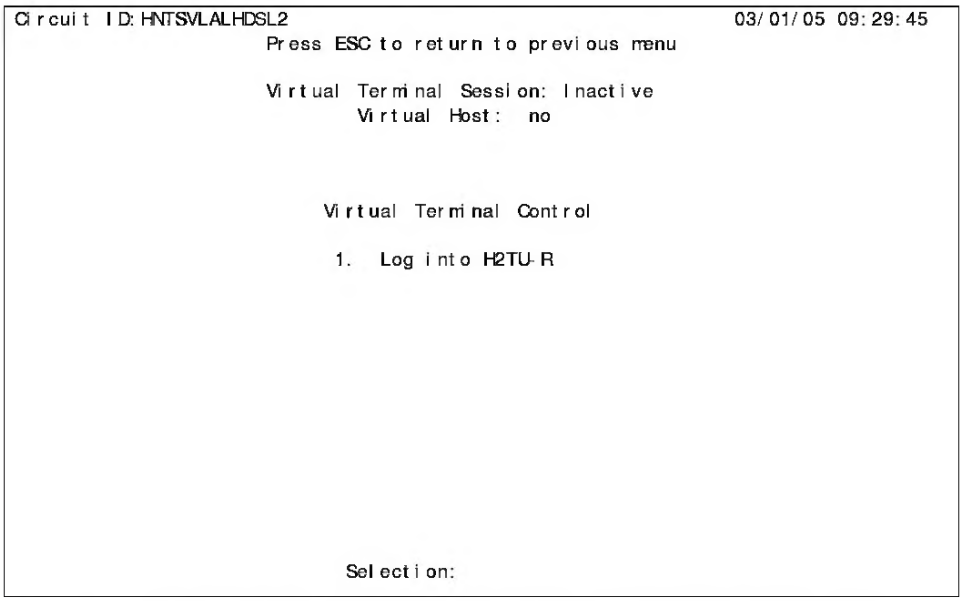

Figure 47. Virtual Terminal Control Screen